700HD

高林股份有限公司 KAULIN MFG. CO. LTD.

The specification and/or appearences of the equipment described in this parts list are subject to change because of modifiction without previous notice.

KZ08Q-2. NOV. 2004

SiRUBA®
銀箭牌工業用縫紉機
INDUSTRIAL SEWING MACHINE

700H

零件圖 PARTS LIST

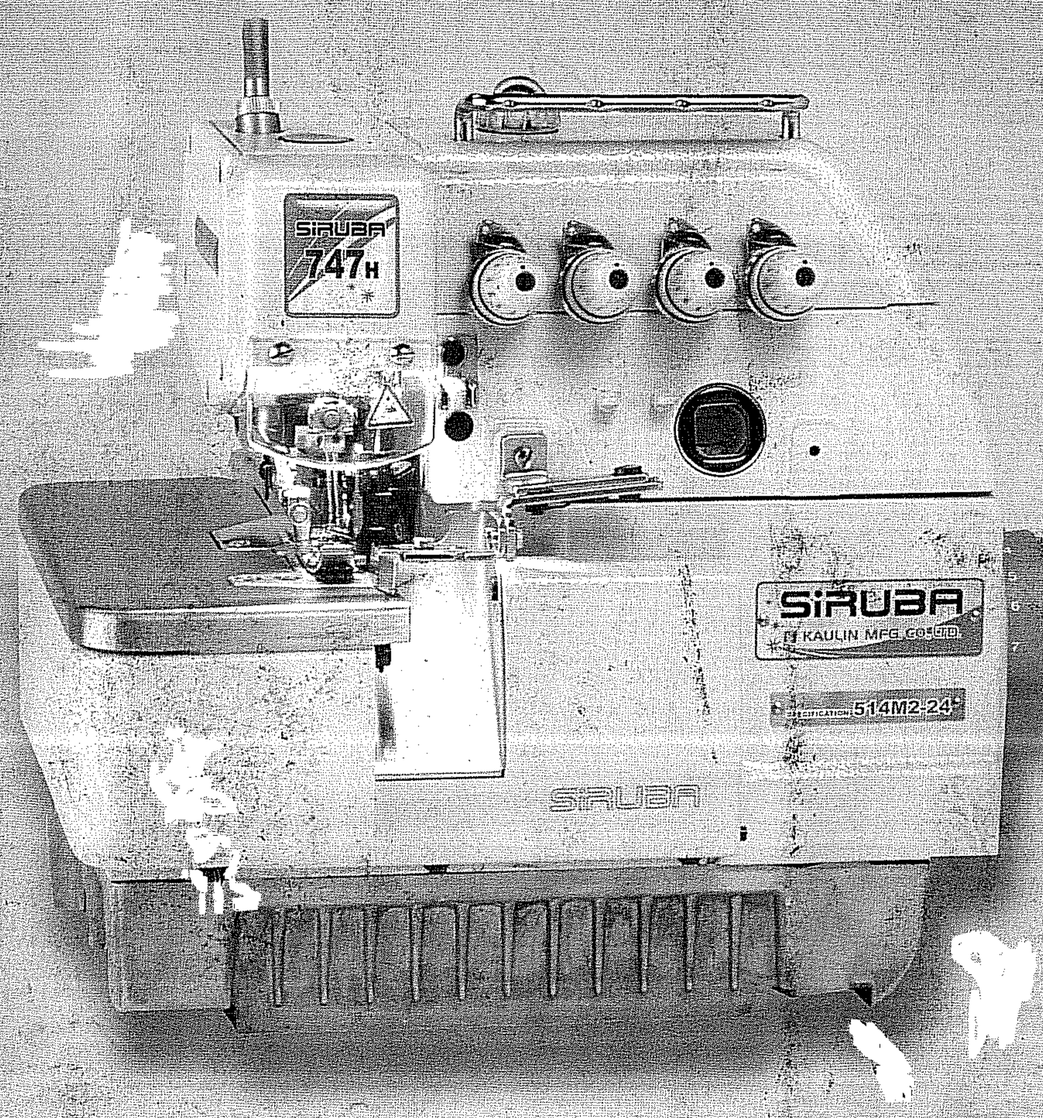

CE

高林股份有限公司
KAULIN MFG. CO., LTD.

機型 MODEL	針板 NEEDLE PLATE	送具 FEED DOG		送具 FEED DOG	押具 PRESSER FOOT	勾針 LOOPER	針座 NEEDLE CLAMP	束子 COLLAR	衝程 CRANK	衝程 CRANK	針號 NEEDLE
737H-504M1-15	E934D	D438	D912	H442	P152D-2	LP26	KG231-E	KJ10F	KF87-A	KJ09B-E	DC27#9
737H-504M2-04	E800	D440	D095	H445	P253E-3	LP26	KG231-E	KJ10F	KF87-A	KJ09B-E	DC27#11
737H-504M2-04CT	E800C	D440	D095	H445	P253E-3	LP26	KG231-E	KJ10F	KF87-A	KJ09B-E	DC27#11
737H-504M2-04LFC-2	E800	D440	D095	H445	P101-3	LP26	KG231-E	KJ10F	KF87-A	KJ09B-E	DC27#11
737H-504M2-04LFC-2/EC	E800C	D440	D095	H445	P101-3	LP26	KG231-E	KJ10F	KF87-A	KJ09B-E	DC27#11
737H-504M2-04TR	E011	D015	D011	H445	P101-3	LP26	KG231-E	KJ10F	KF87-A	KJ09B-E	DC27#11
737H-504M2-04VT	E800	D440	D095	H445	P253E-3	LP26	KG231-E	KJ10F	KF87-A	KJ09B-E	DC27#11
737H-504M2-04WR/LF-B	E001	—	—	—	—	LP26	KG231-E	KJ10F	KF87-A	KJ09B-E	DC27#11
737H-504M3-05PZ	E797	D440	D674	H445	PZ01-A	LP26	KG231-E	KJ10F	KF87-A	KJ09B-E	DC27#18
737H-504M3-05	E797	D440	D674	H445	P230-3	LP26	KG231-E	KJ10F	KF87-A	KJ09B-E	DC27#11
737H-504M3-05CT	E797C	D440	D674	H445	P230-3	LP26	KG231-E	KJ10F	KF87-A	KJ09B-E	DC27#11
737H-504M3-05VT	E797	D440	D674	H445	P230-3	LP26	KG231-E	KJ10F	KF87-A	KJ09B-E	DC27#11
737H-504M5-04BK	E589F	D969	D675	H974	P975-3	LP26	KG231-E	KJ10F	KF87-A	KJ09B-E	DC27#11
737H-504M5-04BK/VT	E589F	D969	D675	H974	P975-3	LP26	KG231-E	KJ10F	KF87-A	KJ09B-E	DC27#11
737H-505F1-04	E784	D438	D674	H442	P152D-3	LP26	KG231-E	KJ10F	KF87-A	KJ09B-E	DC27#9
737H-505F1-04ES	E784	D438	D674	H442	P152D-3	LP26	KG231-E	KJ10F	KF87-A	KJ09B-E	DC27#9
737H-505F1-04VT	E784	D438	D674	H442	P152D-3	LP26	KG231-E	KJ10F	KF87-A	KJ09B-E	DC27#9
737H-504M3-04	E796	D440	D674	H445	P230-3	LP26	KG231-E	KJ10F	KF87-A	KJ09B-E	DC27#11
737H-505F1-04ES/VT	E784	D438	D674	H442	P152D-3	LP26	KG231-E	KJ10F	KF87-A	KJ09B-E	DC27#9
737H-504M2-04EC	E800C	D440	D095	H445	P253E-3	LP26	KG231-E	KJ10F	KF87-A	KJ09B-E	DC27#11
737H-504M1-15VT	E934D	D438	D912	H442	P152D-5	LP26	KG231-E	KJ10F	KF87-A	KJ09B-E	DC27#9
737H-504M2-04TR/EC	E011C	D011	D015	H445	P101-3	LP26	KG231-E	KJ10F	KF87-A	KJ09B-E	DC27#11
737H-504R1-04	E784	D438	D674	H442	P152D-3	LP26	KG231-E	KJ10F	KF87-A	KJ09B-E	DC27#9

規格件表/CONVERSION CHART

機型 MODEL	針板 NEEDLE PLATE	送具 FEED DOG		送具 FEED DOG	押具 PRESSER FOOT	勾針 LOOPER	針座 NEEDLE CLAMP	束子 COLLAR	衝程 CRANK	衝程 CRANK	針號 NEEDLE
747H-512M1-25	E920	D440	D095	H445	P253E-4	LP36	KG242-E	KJ13F	KF86-A	KJ11B-E	DC27#11*2
747H-512M1-25CT	E920C	D440	D095	H445	P253E-4	LP36	KG242-E	KJ13F	KF86-A	KJ11B-E	DC27#11*2
747H-514H4-24GA	E919	D958	D095	H959	P136-A	LP26	KG242-E	KJ13F	KF86-A	KJ11B-E	DC27#11*2
747H-514H4-24GA/CT	E919C	D958	D095	H959	P136-A	LP26	KG242-E	KJ13F	KF86-A	KJ11B-E	DC27#11*2
747H-514H4-24GA/EC	E919C	D958	D095	H959	P136-A	LP26	KG242-E	KJ13F	KF86-A	KJ11B-E	DC27#11*2
747H-514H4-24GA/P	E919	D958	D095	H959	P136P-A	LP26	KG242-E	KJ13F	KF86-A	KJ11B-E	DC27#11*2
747H-514M2-24	E919	D440	D095	H445	P253E-4	LP26	KG242-E	KJ13F	KF86-A	KJ11B-E	DC27#11*2
747H-514M2-24CT	E919C	D440	D095	H445	P253E-4	LP26	KG242-E	KJ13F	KF86-A	KJ11B-E	DC27#11*2
747H-514M2-24EC	E919C	D440	D095	H445	P253E-4	LP26	KG242-E	KJ13F	KF86-A	KJ11B-E	DC27#11*2
747H-514M2-24LF-B	E919	D440	D095	H445	P101-4	LP26	KG242-E	KJ13F	KF86-A	KJ11B-E	DC27#11*2
747H-514M2-24LFC-2	E919	D440	D095	H445	P101-4	LP26	KG242-E	KJ13F	KF86-A	KJ11B-E	DC27#11*2
747H-514M2-24LFC-2/EC	E919C	D440	D095	H445	P101-4	LP26	KG242-E	KJ13F	KF86-A	KJ11B-E	DC27#11*2
747H-514M2-24TG	E919	D440	D095	H445	P254G-4	LP26	KG242-E	KJ13F	KF86-A	KJ11B-E	DC27#11*2
747H-514M2-24TG/EC	E919C	D440	D095	H445	P254G-4	LP26	KG242-E	KJ13F	KF86-A	KJ11B-E	DC27#11*2
747H-514M2-24VT	E810C	D440	D095	H445	P253E-4	LP26	KG242-E	KJ13F	KF86-A	KJ11B-E	DC27#11*2
747H-514M2-25TG	E920	D440	D095	H445	P253G-4	LP26	KG242-E	KJ13F	KF86-A	KJ11B-E	DC27#11*2
747H-514M2-25	E920C	D440	D095	H445	P253E-4	LP26	KG242-E	KJ13F	KF86-A	KJ11B-E	DC27#11*2
747H-514M2-25CT	E920C	D440	D095	H445	P253E-4	LP26	KG242-E	KJ13F	KF86-A	KJ11B-E	DC27#11*2
747H-514M4-23	E804	D440	D674	H445	P230-A	LP26	KG242-E	KJ13F	KF87-A	KJ11B-E	DC27#11*2
747H-514M4-23CT	E804C	D440	D674	H445	P230-A	LP26	KG242-E	KJ13F	KF87-A	KJ11B-E	DC27#11*2
747H-514M5-23BK	E591B	D969	D657	H974	P975-4	LP26	KG242-E	KJ13F	KF86-A	KJ11B-E	DC27#11*2
747H-514M7-23	E804A	D441	D674	H446	P230-A	LP38	KG242-E	KJ13F	KF86-A	KJ11B-E	DC27#16*2
747H-514M7-23CT	E804AC	D441	D674	H446	P230-A	LP38	KG242-E	KJ13F	KF86-A	KJ11B-E	DC27#11*2

機型 MODEL	針板 NEEDLE PLATE	送具 FEED DOG		送具 FEED DOG	押具 PRESSER FOOT	勾針 LOOPER	針座 NEEDLE CLAMP	束子 COLLAR	衝程 CRANK	衝程 CRANK	針號 NEEDLE
747H-514M7-24	E919A	D441	D095	H446	P253E-4	LP38	KG242-E	KJ13F	KF86-A	KJ11B-E	DC27#16*2
747H-514M7-24CT	E919AC	D441	D095	H446	P253E-4	LP38	KG242-E	KJ13F	KF86-A	KJ11B-E	DC27*16*2
747H-514M7-25	E920A	D441	D095	H446	P253E-4	LP38	KG242-E	KJ13F	KF86-A	KJ11B-E	DC27#16*2
747H-514M7-25CT	E920AC	D441	D095	H446	P253E-4	LP38	KG242-E	KJ13F	KF86-A	KJ11B-E	DC27*16*2
747H-514M7-24TG	E919A	D441	D095	H446	P254G-4	LP38	KG242-E	KJ13F	KF86-A	KJ11B-E	DC27#16*2
747H-514M7-25TG	E920A	D441	D095	H446	P254G-4	LP38	KG242-E	KJ13F	KF86-A	KJ11B-E	DC27*16*2
747H-514F1-24	E990	D438	D674	H442	P152D-4	LP26	KG242-E	KJ13F	KF86-A	KJ11B-E	DC27#11*2
747H-514M5-23BK/VT	E591B	D675	D969	H974	P975-4	LP26	KG242-E	KJ13F	KF86-A	KJ11B-E	DC27*11*2
747H-512M1-34	E832	D440	D095	H447	P253E-A	LP36	KG243-E	KJ13F	KF86-A	KJ11B-E	DC27#14*2
757H-401M1/TW	E110	—	—	H101	P767-A	LP26	KG253-E	-	KF86-A	-	DC27*14*2
757H-401M2-50TA	E005	D005	D006	H005	P005-A	-	TA255-E	-	KF86-A	-	DC27#14*2
757H-401M2-50TA/EC	E005C	D005	D006	H005	P005-A	-	TA255-E	-	KF86-A	-	DC27*14*2
757H-516H2-56	E868	D490	D502	H501	P502-A	LP38	KG158-E	KJ13F	KF86-A	KJ11B-E	DC27#18*2
757H-516H2-56CT	E868C	D490	D502	H501	P502-A	LP38	KG158-E	KJ13F	KF86-A	KJ11B-E	DC27*18*2
757H-516H4-35GA	E982	D008	D502	H957	P508-A	LP26	KG253-E	KJ10F	KF87-A	KJ09B-E	DC27#14*2
757H-516H4-35GA/EC	E982C	D008	D502	H957	P508-A	LP26	KG253-E	KJ10F	KF87-A	KJ09B-E	DC27*14*2
757H-516H4-35GA/P	E982	D008	D502	H957	P508P-A	LP26	KG253-E	KJ10F	KF87-A	KJ09B-E	DC27#14*2
757H-516H4-35GA/P/EC	E982C	D008	D502	H957	P508P-A	LP26	KG253-E	KJ10F	KF87-A	KJ09B-E	DC27*14*2
757H-516H4-55GA	E986	D956	D502	H957	P509-A	LP26	KG255-E	KJ10F	KF87-A	KJ09B-E	DC27#14*2
757H-516H4-55GA/EC	E986C	D956	D502	H957	P509-A	LP26	KG255-E	KJ10F	KF87-A	KJ09B-E	DC27*14*2
757H-516H4-55GA/P	E986	D956	D502	H957	P509P-A	LP26	KG255-E	KJ10F	KF87-A	KJ09B-E	DC27#14*2
757H-516H4-55GA/P/EC	E986C	D956	D502	H957	P509P-A	LP26	KG255-E	KJ10F	KF87-A	KJ09B-E	DC27*14*2
757H-516L1-24	E834	D487	D060	H492	P500-A	LP26	KG252-E	KJ10F	KF87-A	KJ09B-E	DC27#14*2

規格件表/CONVERSION CHART

規格件表/CONVERSION CHART

機型 MODEL	針板 NEEDLE PLATE	送具 FEED DOG		送具 FEED DOG	押具 PRESSER FOOT	勾針 LOOPER	針座 NEEDLE CLAMP	束子 COLLAR	衝程 CRANK	衝程 CRANK	針號 NEEDLE
757H-516L1-24CT	E834C	D487	D060	H492	P500-A	LP26	KG252-E	KJ10F	KF87-A	KJ09B-E	DC27#14*2
757H-516L1-35	E839	D487	D060	H492	P504-A	LP26	KG253-E	KJ10F	KF87-A	KJ09B-E	DC27#14*2
757H-516L1-35CT	E839C	D487	D060	H492	P504-A	LP26	KG253-E	KJ10F	KF87-A	KJ09B-E	DC27#14*2
757H-516M2-35	E982	D489	D502	H497	P504-A	LP26	KG253-E	KJ10F	KF87-A	KJ11B-E	DC27#14*2
757H-516M2-35CT	E982C	D489	D502	H497	P504-A	LP26	KG253-E	KJ10F	KF87-A	KJ11B-E	DC27#14*2
757H-516M2-35PS	E982S	D489	D502	H497	P504S-A	LP26	KG253-E	KJ10F	KF87-A	KJ11B-E	DC27#14*2
757H-516M2-35PS/EC	E982SC	D489	D502	H497	P504S-A	LP26	KG253-E	KJ10F	KF87-A	KJ11B-E	DC27#14*2
757H-516M2-55	E986	D489	D502	H500	P502-A	LP26	KG255-E	KJ10F	KF87-A	KJ11B-E	DC27#14*2
757H-516M2-55CT	E986C	D489	D502	H500	P502-A	LP26	KG255-E	KJ10F	KF87-A	KJ11B-E	DC27#14*2
757H-516M2-55PS	E986S	D489	D502	H497	P502S-A	LP26	KG255-E	KJ10F	KF87-A	KJ11B-E	DC27#14*2
757H-516M2-55PS/EC	E986SC	D489	D502	H497	P502S-A	LP26	KG255-E	KJ10F	KF87-A	KJ11B-E	DC27#14*2
757H-516X2-56	E870	D490	D502	H501	P960-A	LP38	KG255-E	KJ13F	KF86-A	KJ11B-E	DC27#18*2
757H-516X2-56CT	E870C	D490	D502	H501	P960-A	LP38	KG255-E	KJ13F	KF86-A	KJ11B-E	DC27#18*2
757H-516X3-56	E870	D490	D502	H501	P960-A	LP38	KG158A-E	KJ13F	KF86-A	KJ11B-E	TVx64#21*2
757H-516X3-56CT	E870C	D490	D502	H501	P960-A	LP38	KG158A-E	KJ13F	KF86-A	KJ11B-E	TVx64#21*2
757H-516M2-55/EC	E986C	D489	D502	H500	P502-A	LP26	KG255-E	KJ13F	KF87-A	KJ11B-E	DC27#14*2
757H-401M1/TW/CT	E110C	—	—	H101	P767-A	LP26	KG253-E	KJ13F	KF87-A	KJ09B-E	DC27#14*2
767H-516HM2-324	E989	D971	D502	H497	P233-A	LP26	KG433-E	KJ13F	KF86-A	KJ11B-E	DC27#11*3
767H-516M2-324/CT	E989C	D971	D502	H497	P233-A	LP26	KG433-E	KJ13F	KF86-A	KJ11B-E	DC27#11*3
767H-516M2-524	E988	D972	D502	H500	P255-A	LP26	KG455-E	KJ13F	KF86-A	KJ11B-E	DC27#11*3
767H-516M2-524CT	E988C	D972	D502	H500	P255-A	LP26	KG455-E	KJ13F	KF86-A	KJ11B-E	DC27#11*3

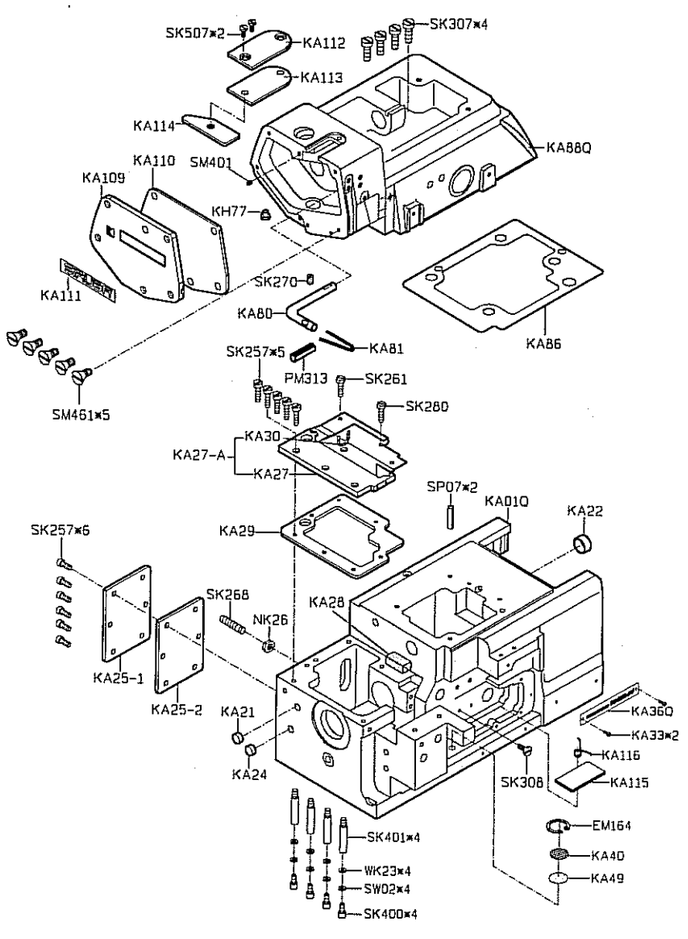

MODEL	#3,#4	#5,#6
PARTS NO	KB01E	KB02E
	KB22F	KB23F

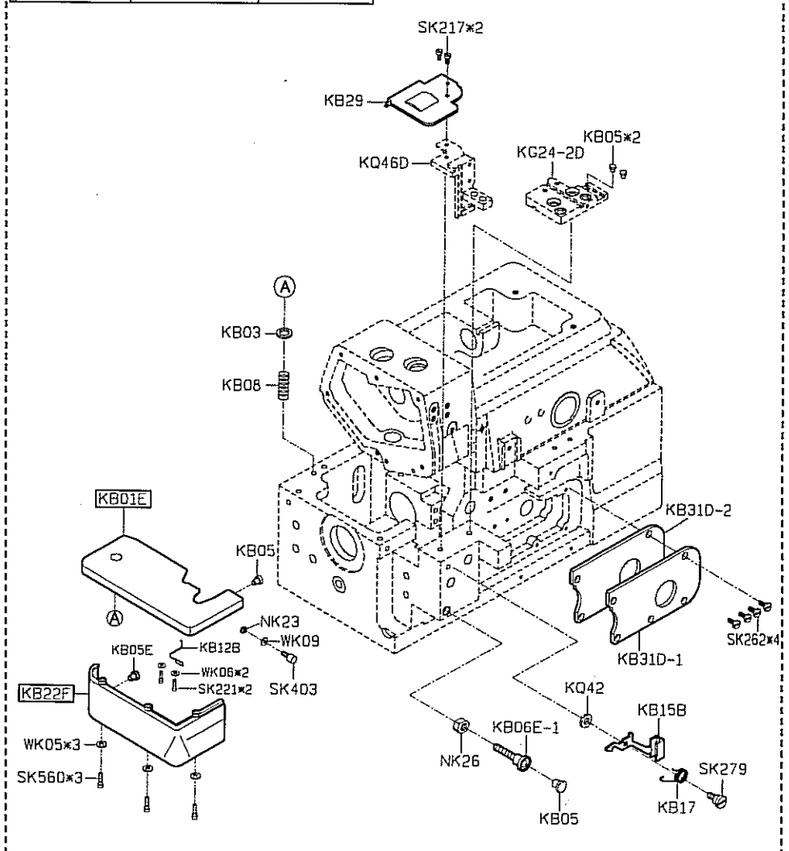

PARTS LIST FOR KA GROUP

PARTS LIST FOR KB GROUP

PARTS LIST FOR KC GROUP

MODEL	#3,#4	#5	#6
PARTS NO	KC87	KC90	KC90
	KC100	KC100	KC122

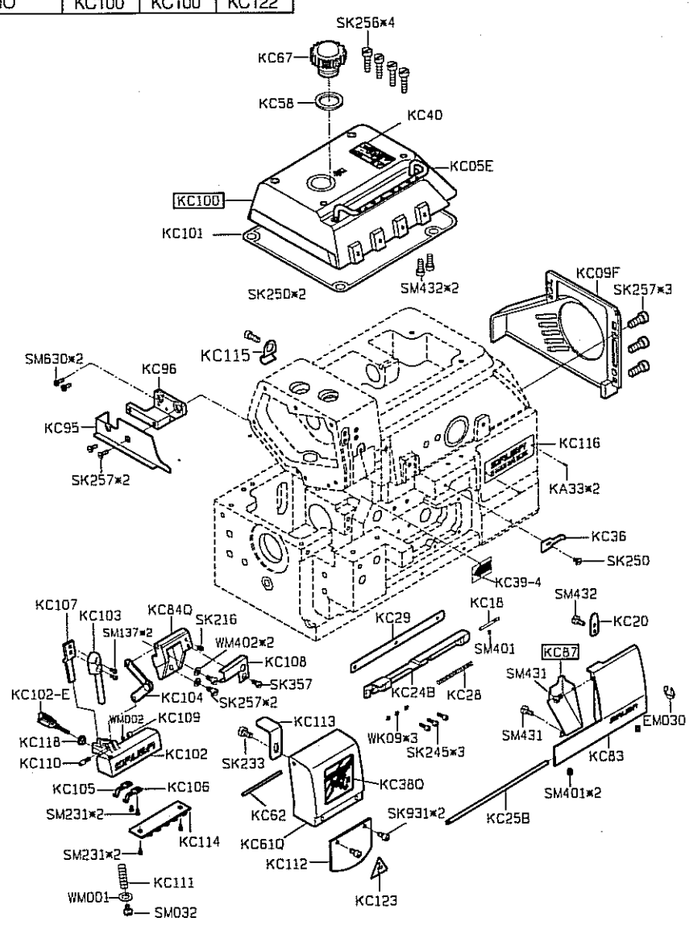

PARTS LIST FOR KD GROUP

MODEL	#3,#4	#5,#6
PARTS NO	KD27D	KD26D
	KP59	KP18
	SK294	KD33

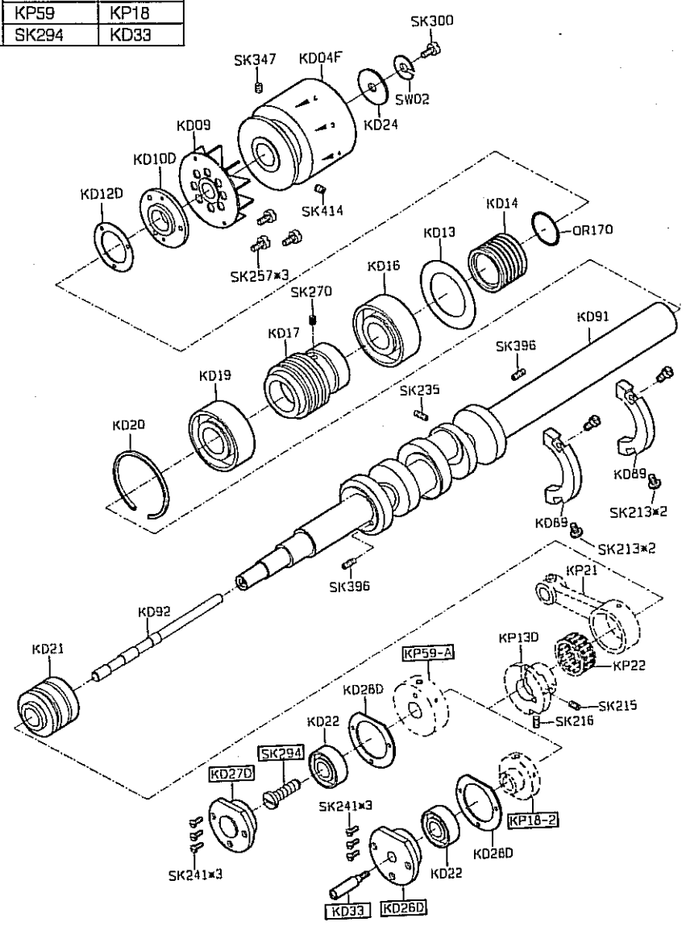

MODEL	#3,#5	#4,#6
PARTS NO	KF87	KF86

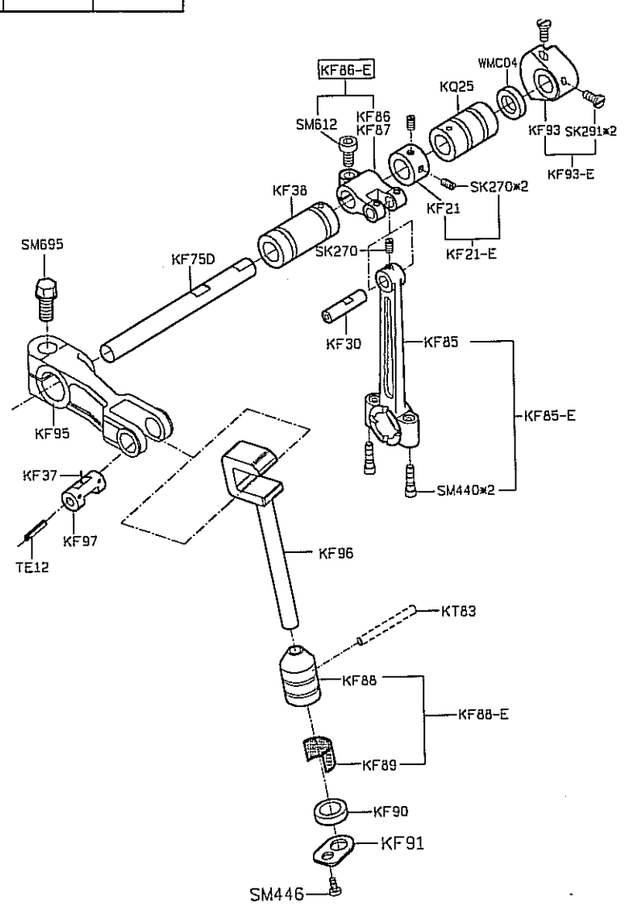

PARTS LIST FOR KF GROUP

MODEL	#3	#4	#5	#6
PARTS NO	KG60F	KG60F	KG11F	KG11F
	KG471	KG472	KG35	KG35
	KG81	KG80	KG81	KG80
			KG31D	KG32D
			KG37	KG37
	KU18	KU18	KG39	KG39
				KG10E
	KG93	KG92	KG94 KG95 KG96 KG30-1	KG97 KG98

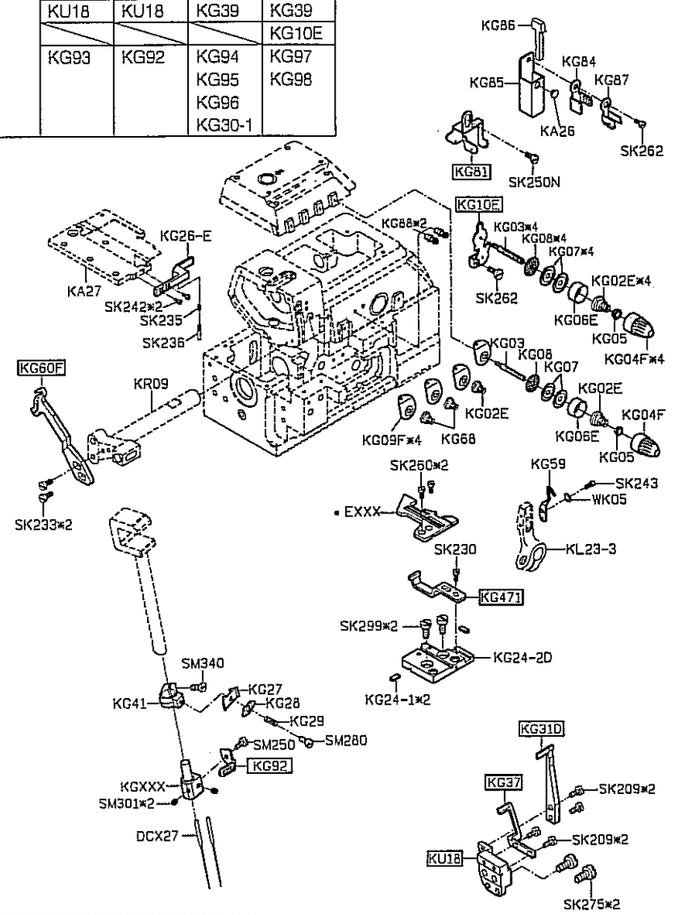

PARTS LIST FOR KG GROUP

PARTS LIST FOR KJ GROUP

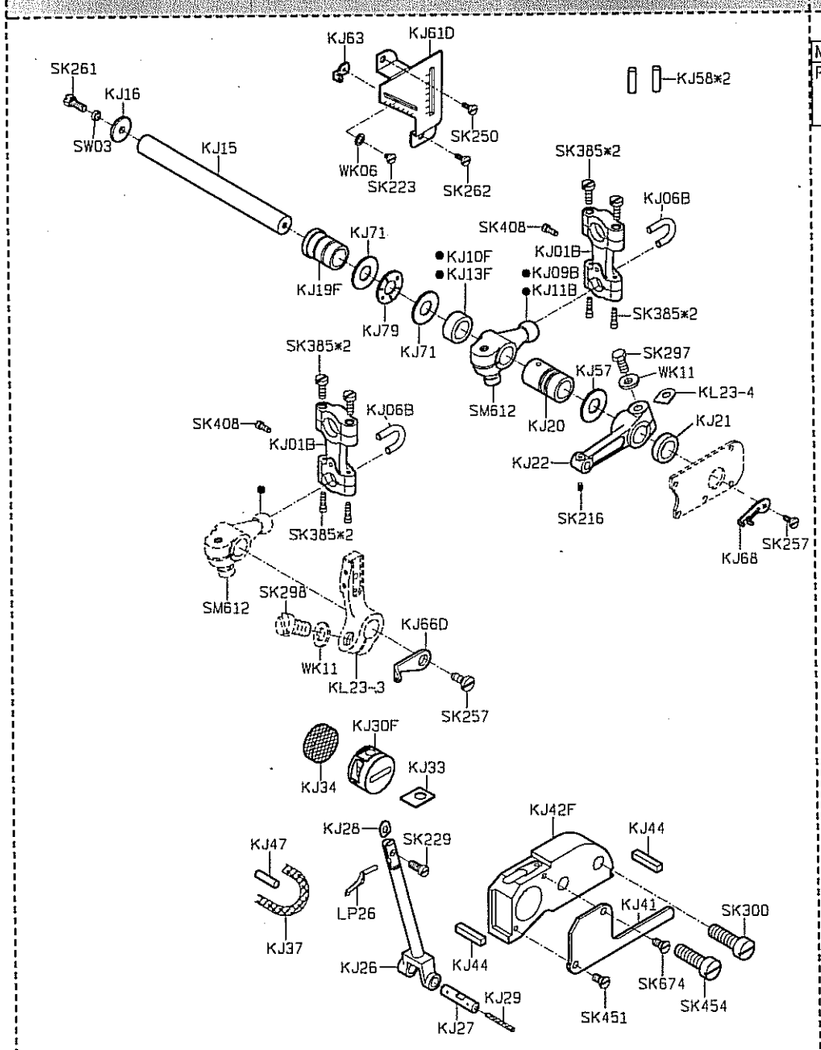

PARTS LIST FOR KL GROUP

MODEL	#3,#4	#5,#6
PARTS NO	KL57	KL16
	KL15	KL11
		KL09B-E

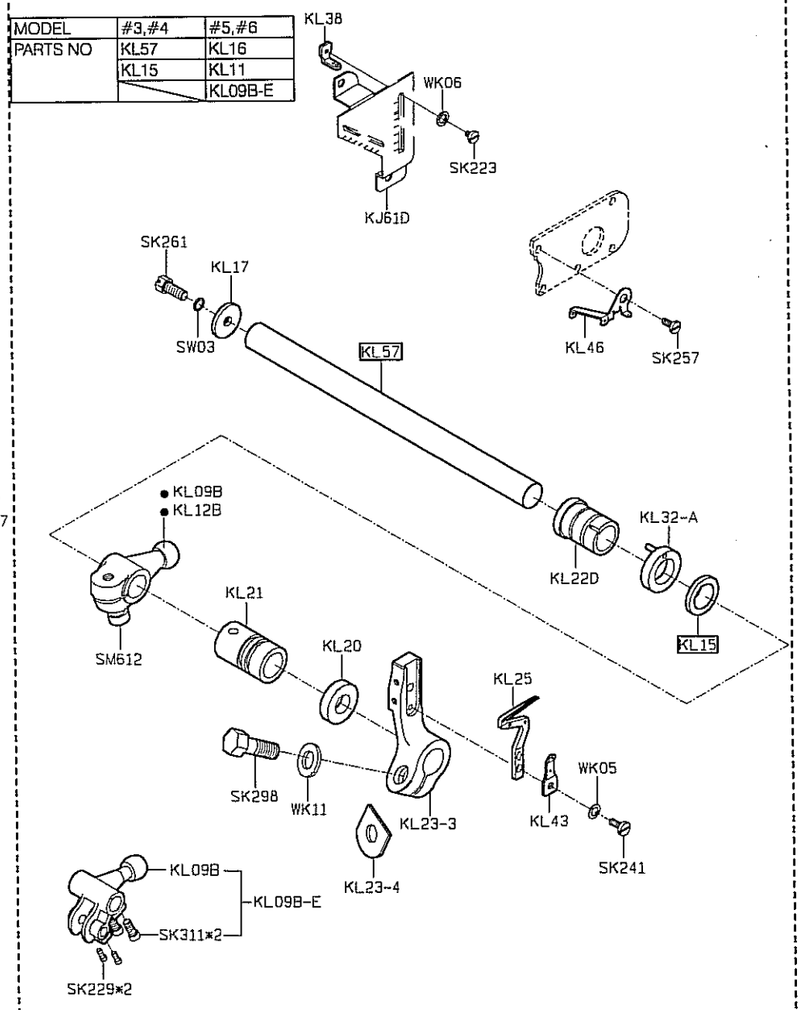

PARTS LIST FOR KP GROUP

MODEL	#3,#4	#5,#6
PARTS NO	KP59	KP18-2

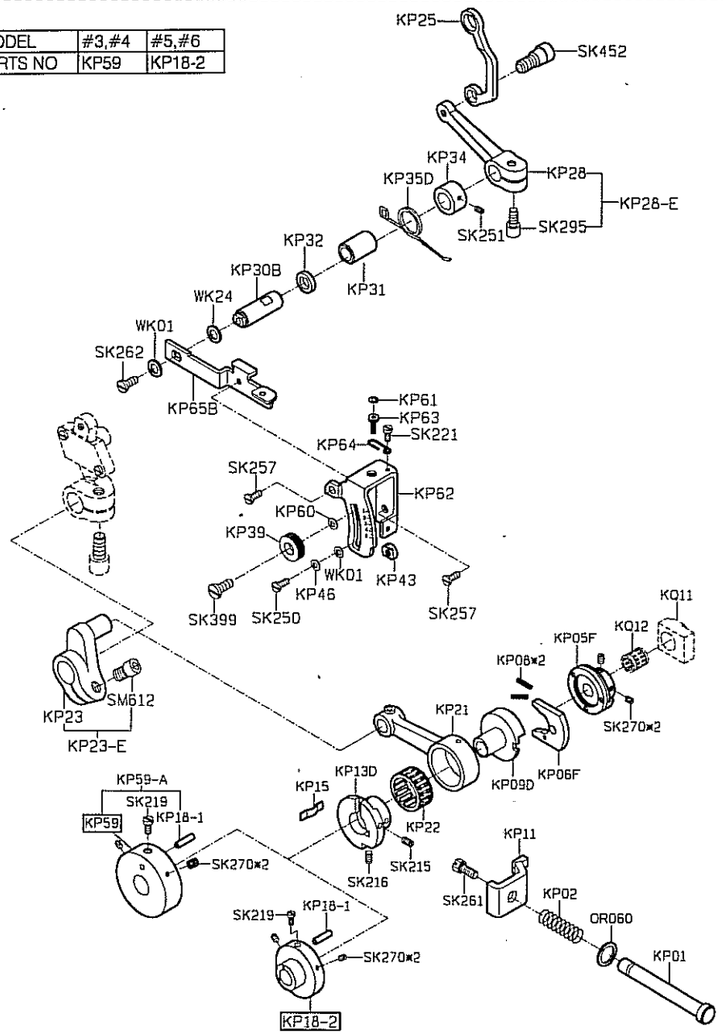

PARTS LIST FOR KQ GROUP

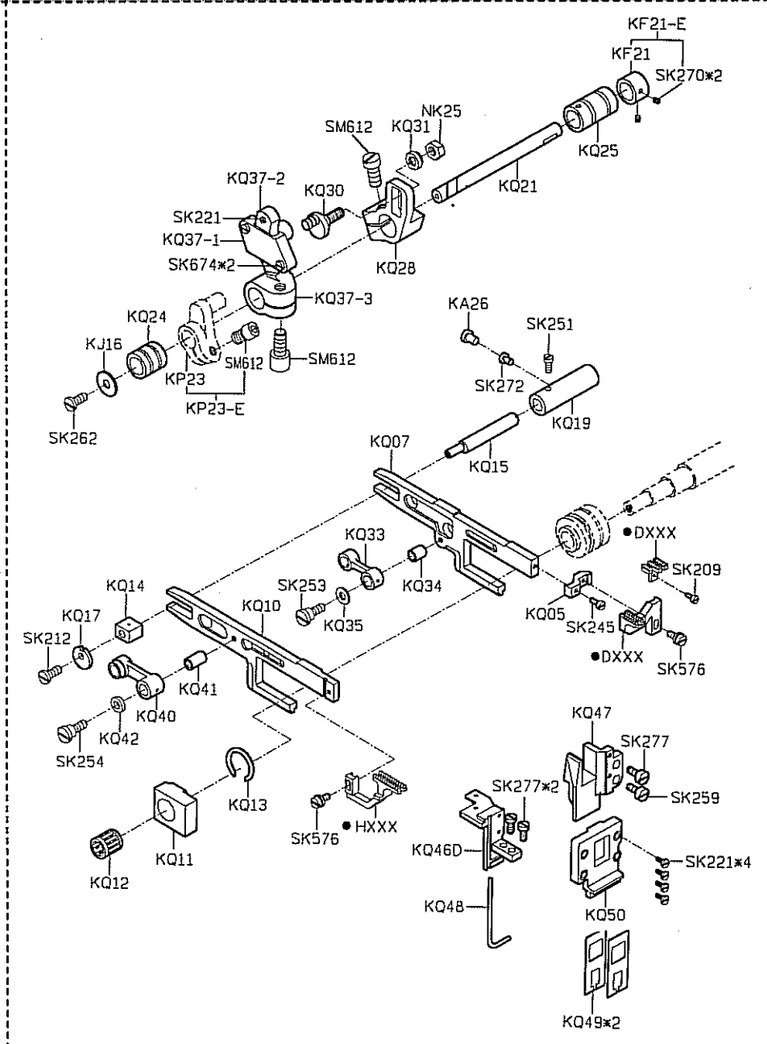

PARTS LIST FOR KR GROUP

MODEL	#3 / #4		#5	#6
PARTS NO	KR20	KR20	KR19	KR19
	KR27	KR27	KR26	KR26
	KR53	KR24	KR53	KR24

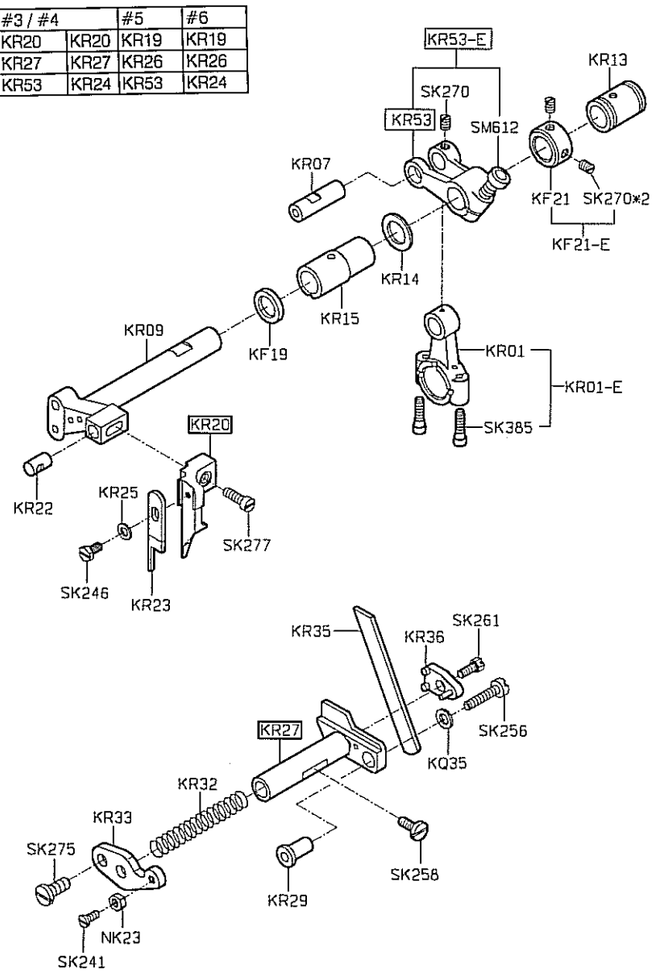

PARTS LIST FOR KS GROUP

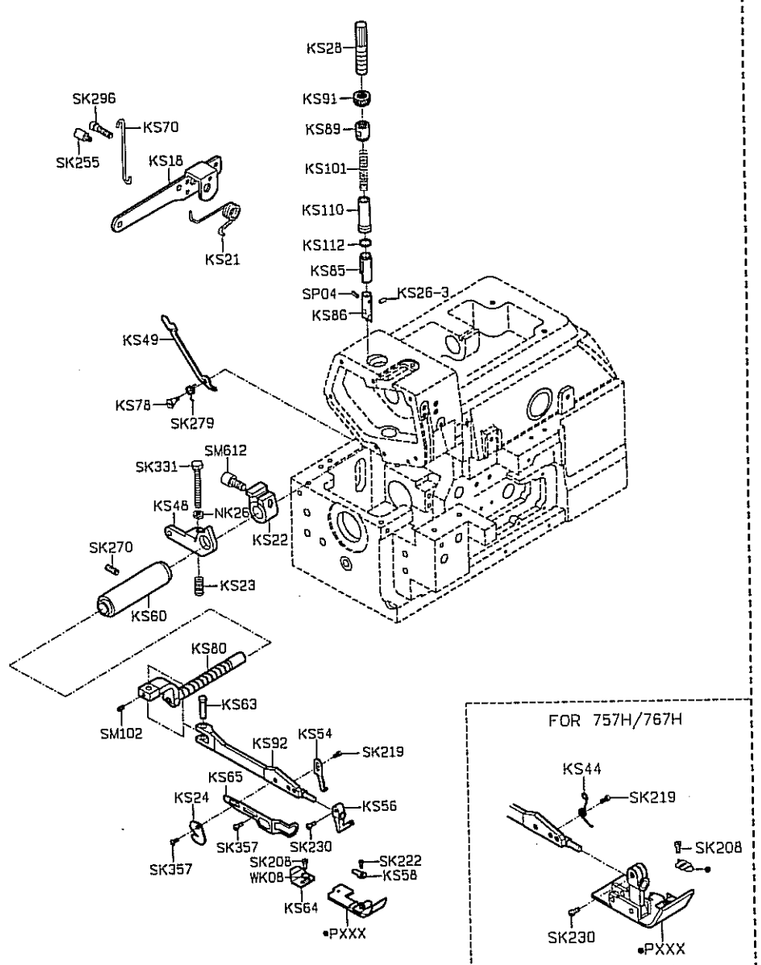

PARTS LIST FOR KT GROUP

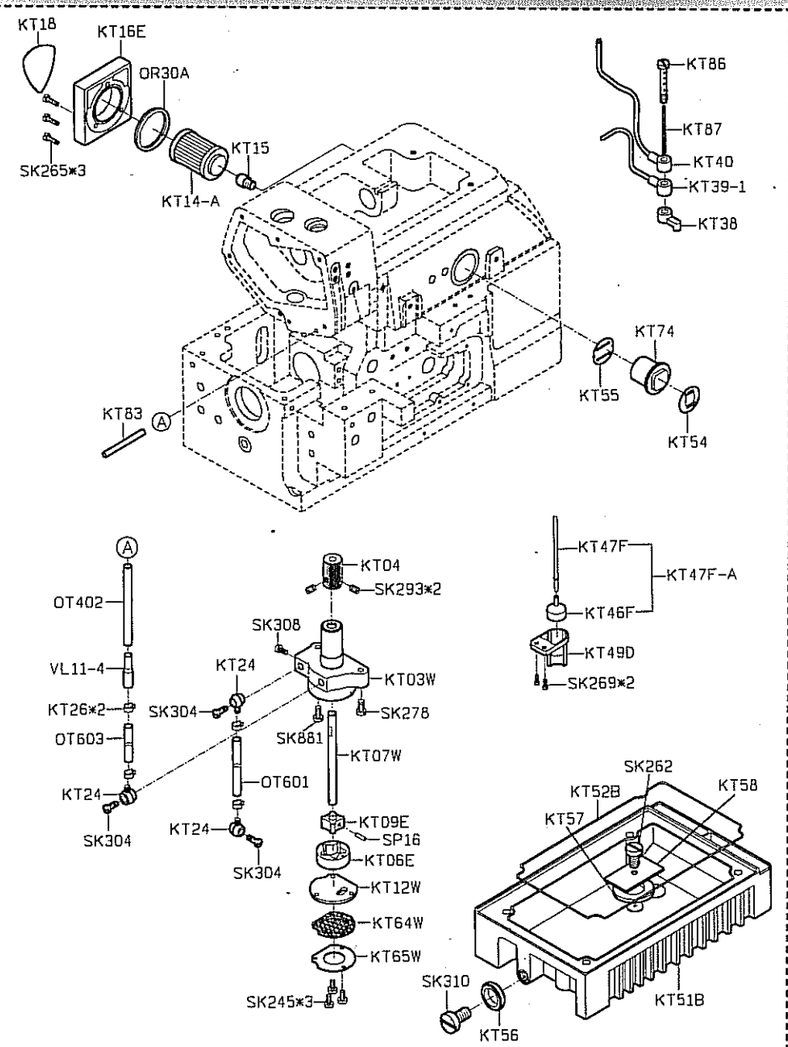

PARTS LIST FOR KU GROUP

MODEL	#3,#4	#5,#6
PARTS NO	KU40	KU39
	KU25	KU24
	KU15	KU14

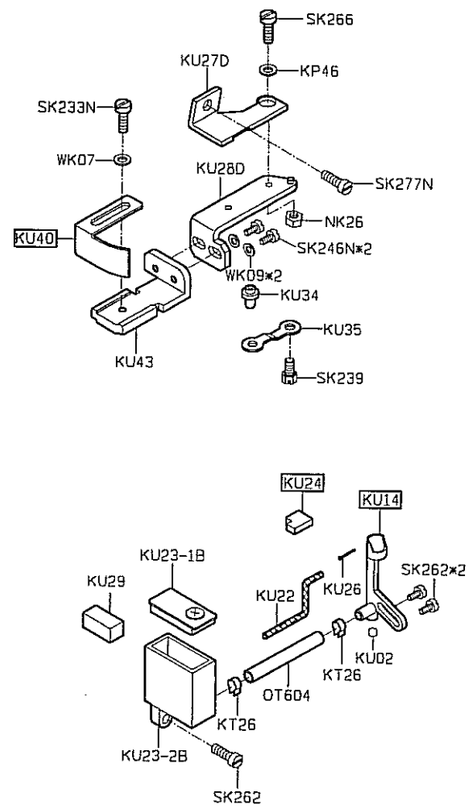

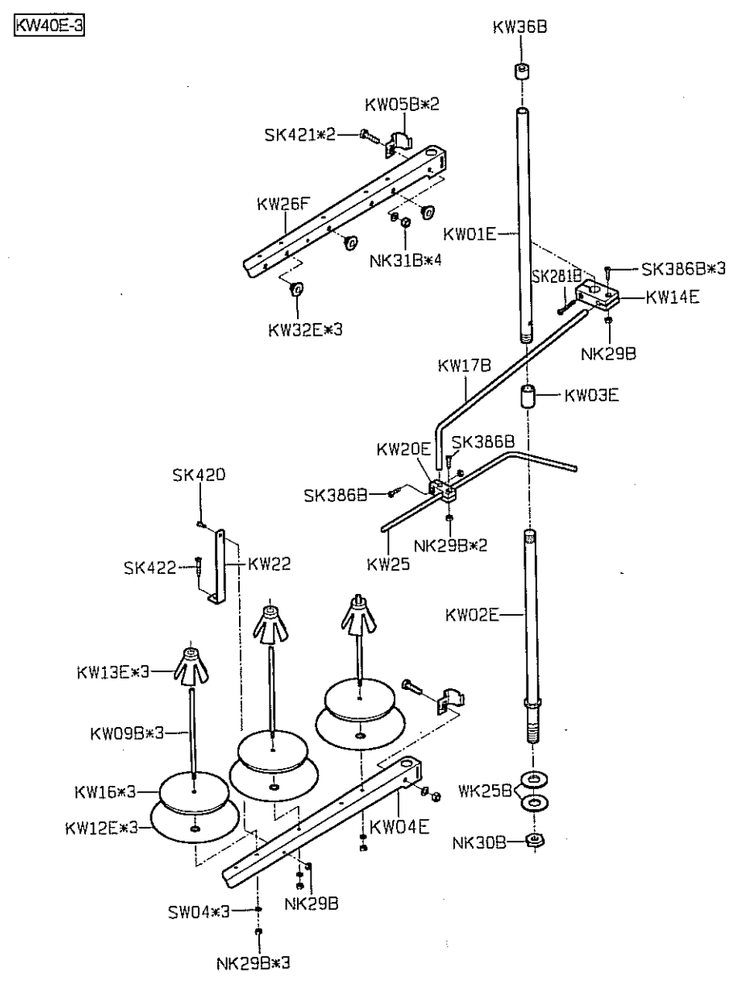

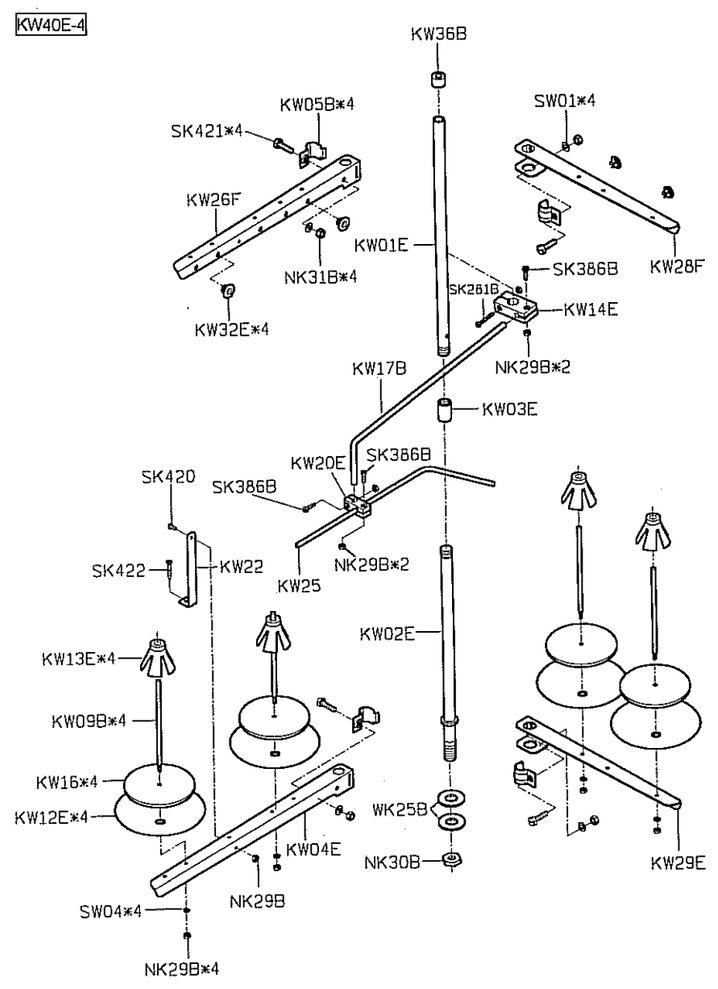

PARTS LIST FOR KW GROUP

KW40E-5

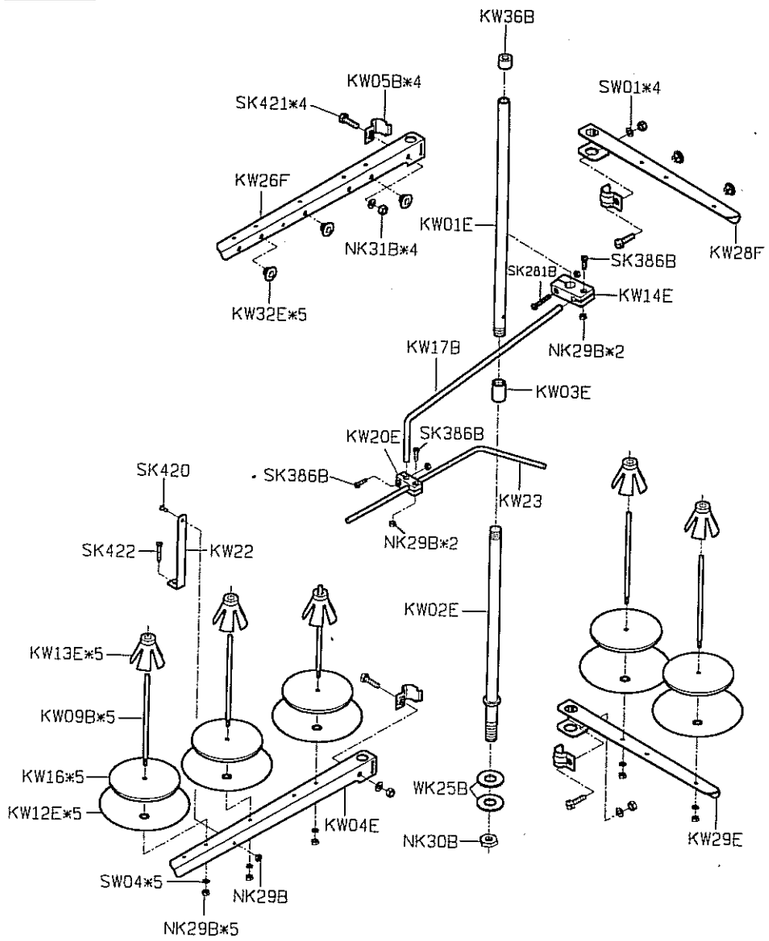

PARTS LIST FOR KW GROUP

KW40E-6

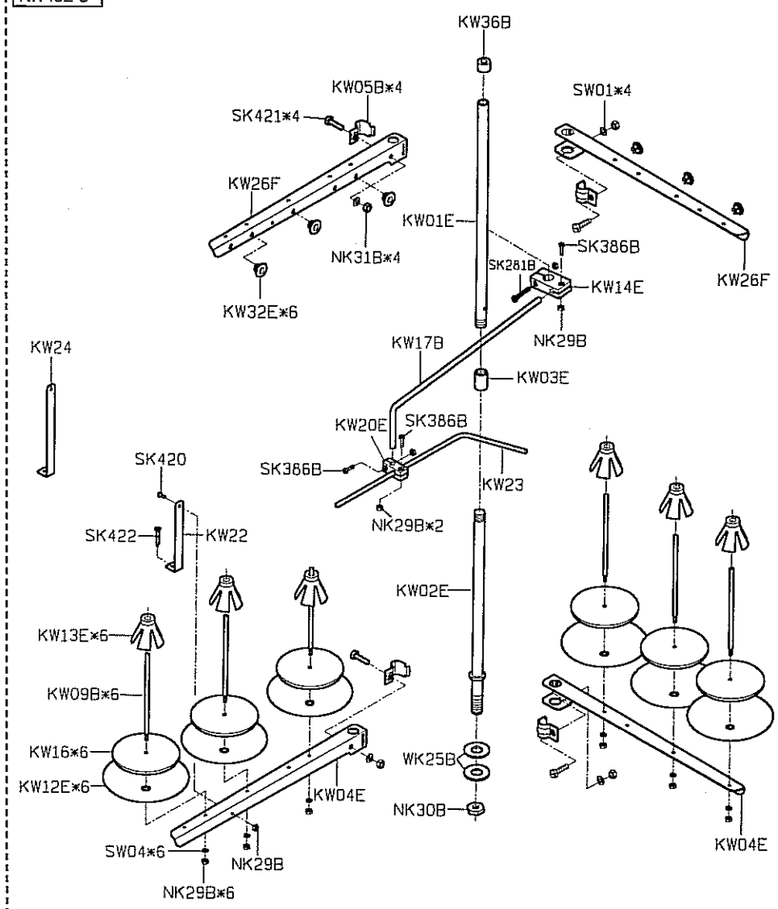

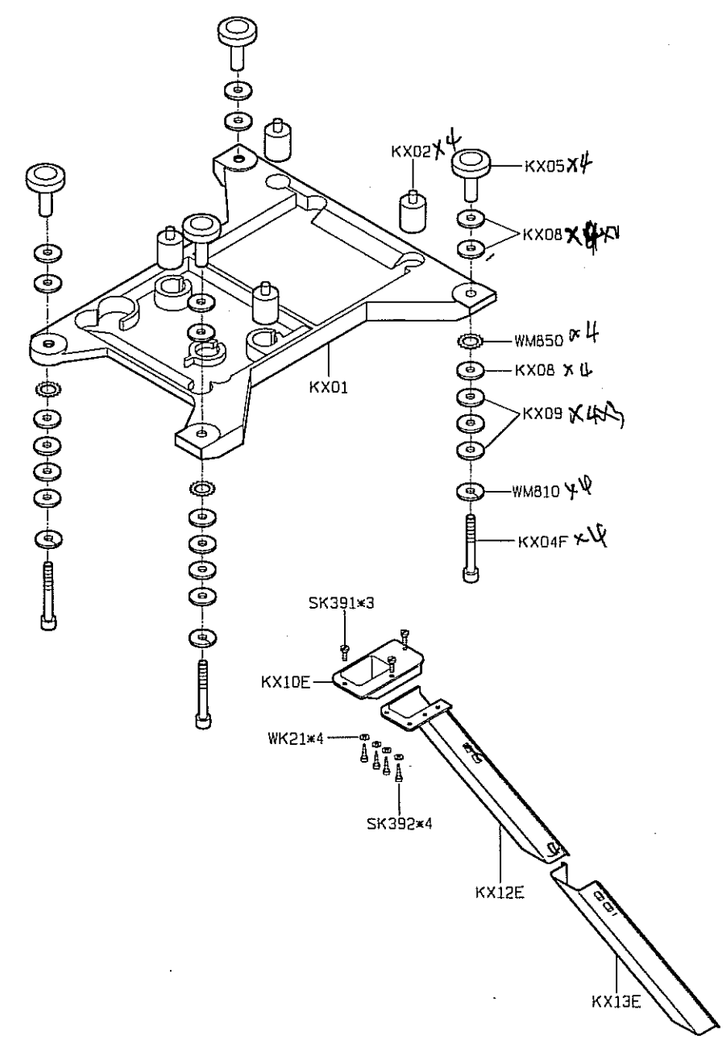

PARTS LIST FOR KX GROUP

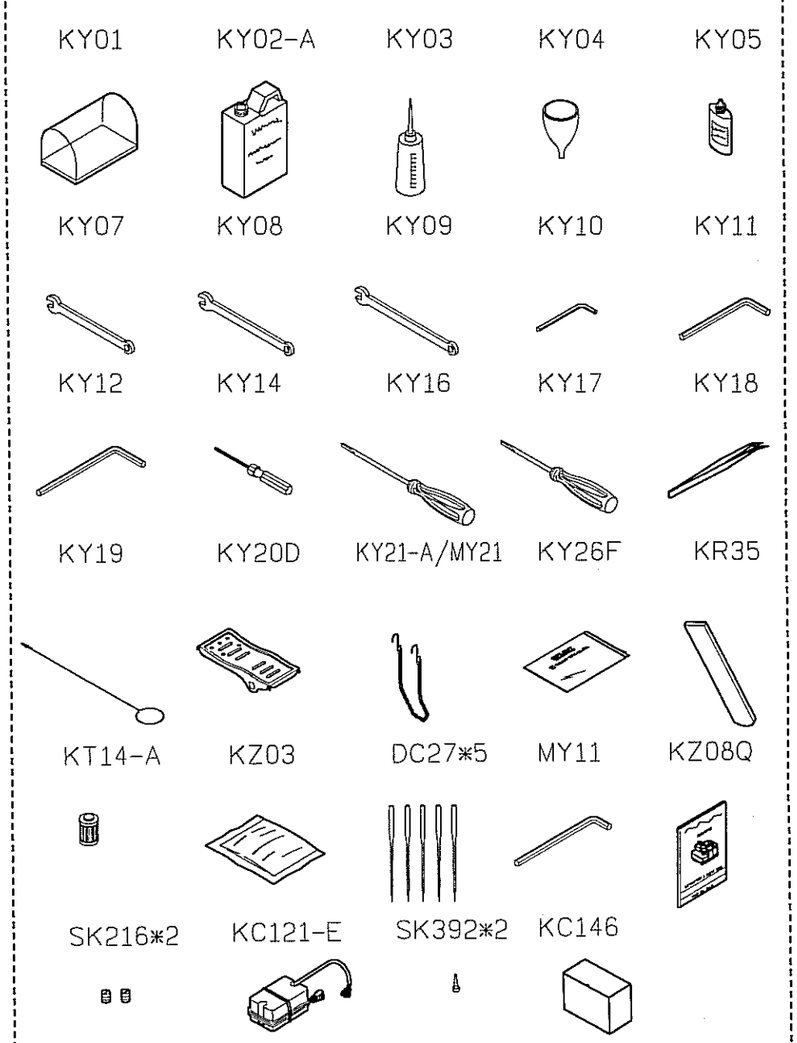

PARTS LIST FOR KY GROUP
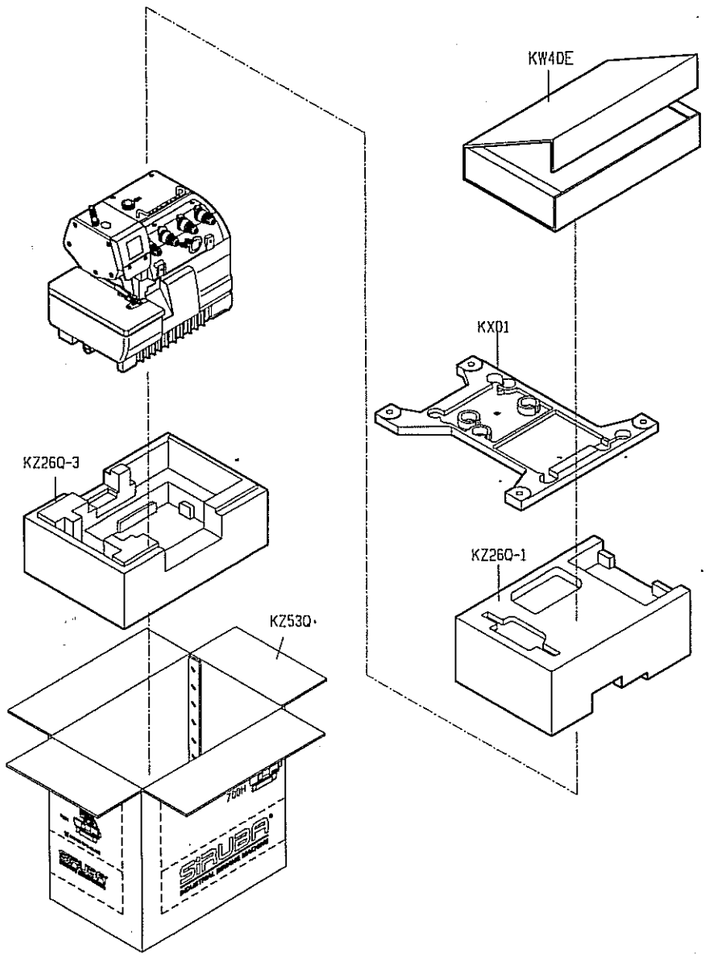
PARTS LIST FOR KZ GROUP