SiRUBA GAGE PARTS LIST	Series	Remark	Page	Date
	700Q		2 / 2	2012/10/04

	機型 Model	針板 Needle Plate	送具 Feed Dog		送具 Feed Dog	押具 Presser Foot	勾針 Looper	針鐺 Needle Clamp	束環 Coller	衝程 Crank	衝程 Crank	大心 Crank Shaft	勾針連桿座 Upper Looper Holder	過線件 Thread Guide	下刀架 Lower Knift Holder	針 Needle
747Q	514M7-24/BK	E247	D203	D207	H203	P202Q-A	LP230	KG242K-E	KJ204K	KF203-E	KJ203-E	KD301A	KJ228	KJ238	KR209	DCX27#16*2
	514M7-24/BK-1	E247	D203	D207	H203	P202Q-A	LP230	KG242K-E	KJ204K	KF203-E	KJ203-E	KD301A	KJ228	KJ238	BK239	DCX27#16*2
	514M7-24/BKS	E247Q	D203	D207	H203	P202Q-A	LP230	KG242K-E	KJ204K	KF203-E	KJ203-E	KD301A	KJ228	KJ238	BK309	DCX27#16*2
	514M7-24/TG	E226	D212	D207	H210	P254J-4A	LP230	KG242K-E	KJ204K	KF203-E	KJ203-E	KD301A	KJ228	KJ238	KR209	DCX27#16*2
	514M7-25	E225	D212	D207	H210	P201-A	LP230	KG242K-E	KJ204K	KF203-E	KJ203-E	KD301A	KJ228	KJ238	KR209	DCX27#16*2
	514M7-25/BK	E248	D203	D207	H203	P202Q-A	LP230	KG242K-E	KJ204K	KF203-E	KJ203-E	KD301A	KJ228	KJ238	KR209	DCX27#16*2
	514M7-25/BK-1	E248	D203	D207	H203	P202Q-A	LP230	KG242K-E	KJ204K	KF203-E	KJ203-E	KD301A	KJ228	KJ238	BK239	DCX27#16*2
	514M7-25/BKS	E248Q	D203	D207	H203	P202Q-A	LP230	KG242K-E	KJ204K	KF203-E	KJ203-E	KD301A	KJ228	KJ238	BK309	DCX27#16*2
757Q	401M1/TW	E237	D219		H219	P506-A		KG253K-E	KJ204	KF203-E	KJ206-E	KD301	TW201			DCX27#14
	516H4-35/GA	E213	D204	D207	H205	P508J-A	LP226	KG253K-E	KJ204	KF203-E	KJ206-E	KD301	KJ236	KJ219	KR219	DCX27#14*2
	516H4-35/GAP	E213	D204	D207	H205	P508JP-A	LP226	KG253K-E	KJ204	KF203-E	KJ206-E	KD301	KJ236	KJ219	KR219	DCX27#14*2
	516H4-55/GA	E214	D205	D207	H206	P509J-A	LP226	KG255K-E	KJ204	KF203-E	KJ206-E	KD301	KJ236	KJ219	KR219	DCX27#14*2
	516H4-55/GAP	E214	D205	D207	H206	P509JP-A	LP226	KG255K-E	KJ204	KF203-E	KJ206-E	KD301	KJ236	KJ219	KR219	DCX27#14*2
	516L1-24	E215	D206	D207	H207	P500J-A	LP225	KG252K-E	KJ204	KF203-E	KJ206-E	KD301	KJ236	KJ219	KR219	DCX27#14*2
	516L1-35	E216	D206	D207	H212	P504J-A	LP225	KG253K-E	KJ204	KF203-E	KJ206-E	KD301	KJ236	KJ219	KR219	DCX27#14*2
	516M2-35	E217	D208	D207	H208	P504J-A	LP226	KG253K-E	KJ204	KF203-E	KJ206-E	KD301	KJ236	KJ219	KR219	DCX27#14*2
	516M2-35/PS	E227	D208	D207	H214	P504JS-A	LP226	KG253K-E	KJ204	KF203-E	KJ206-E	KD301	KJ236	KJ219	KR219	DCX27#14*2
	516M2-55	E218	D208	D207	H209	P502J-A	LP226	KG255K-E	KJ204	KF203-E	KJ206-E	KD301	KJ236	KJ219	KR219	DCX27#14*2
	516M2-55/PS	E228	D208	D207	H215	P502JS-A	LP226	KG255K-E	KJ204	KF203-E	KJ206-E	KD301	KJ236	KJ219	KR219	DCX27#14*2
	516X2-56	E234	D216A	D207	H220A	P962-A	LP230	KG255K-E	KJ234K KJ234	KF203-E	KJ206-E	KD301A	KJ236	KJ238	KR223	DCX27#18*2
	401M2-50/TA	E238	D211	D222	H216	P223-A		KG256K-E	KJ204	KF203-E	KJ206-E	KD301	TW201		KR219	DCX27#14*2
767Q	516M2-324	E219	D208	D207	H209	P233J-A	LP226	KG433K-E	KJ234K	KF203-E	KJ203-E	KD301	KJ208	KJ219	KR219	DCX27#11*3
	516M2-524	E224	D208	D207	H209	P255J-A	LP226	KG455K-E	KJ234K	KF203-E	KJ203-E	KD301	KJ208	KJ219	KR219	DCX27#11*3

SiRUBA GAGE PARTS LIST	Series	Remark	Page	Date
	988Q		1 / 2	2012/12/25

	機型 Model	針板 Needle Plate	送具 Feed Dog		送具 Feed Dog	押具 Presser Foot	勾針 Looper	針鐺 Needle Clamp	束環 Coiler	衝程 Crank	衝程 Crank	大心 Crank Shaft	勾針連桿座 Upper Looper Holder	過線件 Thread Guide	下刀架 Lower Knife Holder	針 Needle
988Q-3T	503M2-04	E222	D210	D207	H204	P201-14A	LP231	KG231K-E	KJ204	KF203-E	KJ206-E	KD301	KJ236	KJ219	KR209	DCX27#11
	504F1-04	E206	D201	D207	H201	P201-14A	LP225	KG231K-E	KJ204	KF203-E	KJ206-E	KD301	KJ236	KJ219	KR209	DCX27#9
	504F1-15	E233K	D201	D217	H201	P214P-A	LP225	KG231K-E	KJ204	KF203-E	KJ206-E	KD301	KJ236	KJ219	KR209	DCX27#9
	504F2-02/GAL-Q	E233K	D201	D217	H201	P214P-2A	LP225	KG231K-E	KJ204	KF203-E	KJ206-E	KD301	KJ236	KJ219	KR209	DCX27#9
	504M1-15	E207	D201	D209	H201	P211-A	LP225	KG231K-E	KJ204	KF203-E	KJ206-E	KD301	KJ236	KJ219	KR209	DCX27#9
	504M2-04	E222	D210	D207	H204	P201-14A	LP225	KG231K-E	KJ204	KF203-E	KJ206-E	KD301	KJ236	KJ219	KR209	DCX27#11
	504M2-04/TR	E222	D210	D207	H204	P216-3	LP225	KG231K-E	KJ204	KF203-E	KJ206-E	KD301	KJ236	KJ219	KR209	DCX27#11
	504M3-04	E220	D210	D209	H204	P201-14A	LP225	KG231K-E	KJ204	KF203-E	KJ206-E	KD301	KJ236	KJ219	KR209	DCX27#11
	504M3-05	E221	D210	D209	H204	P201-14A	LP225	KG231K-E	KJ204	KF203-E	KJ206-E	KD301	KJ236	KJ219	KR209	DCX27#11
	504M3-05/PZ	E221	D210	D209	H204	P257-A	LP225	KG231K-E	KJ204	KF203-E	KJ206-E	KD301	KJ236	KJ219	KR209	DCX27#18
	504M5-04/BK	E232	D203	D207	H203	P202Q-2A	LP225	KG231K-E	KJ204	KF203-E	KJ206-E	KD301	KJ236	KJ219	KR209	DCX27#11
	504M5-04/BK-1	E232	D203	D207	H203	P202Q-2A	LP225	KG231K-E	KJ204	KF203-E	KJ206-E	KD301	KJ236	KJ219	BK239	DCX27#11
	505F1-04	E206	D201	D207	H201	P203-A	LP225	KG231K-E	KJ204	KF203-E	KJ206-E	KD301	KJ236	KJ219	KR209	DCX27#9
988Q-4T	512M1-25	E208	D210	D207	H204	P201-25A	LP228	KG242K-E	KJ204	KF215-E	KJ203-E	KD301	KJ208	KJ219	KR209	DCX27#11*2
	512M1-34	E236	D210	D207	H204	P214-A	LP228	KG254K-E	KJ204	KF215-E	KJ203-E	KD301	KJ208	KJ219	KR209	DCX27#14*2
	514F1-24	E212K	D210	D207	H204	P201-24A	LP226	KG242K-E	KJ234K	KF203-E	KJ203-E	KD301	KJ208	KJ219	KR209	DCX27#11*2
	514H4-24/GA	E229	D202	D207	H202	P204-A	LP226	KG242K-E	KJ234K	KF203-E	KJ203-E	KD301	KJ208	KJ219	KR209	DCX27#11*2
	514H4-24/GAP	E229	D202	D207	H202	P204P-A	LP226	KG242K-E	KJ234K	KF203-E	KJ203-E	KD301	KJ208	KJ219	KR209	DCX27#11*2
	514M2-24	E229	D210	D207	H204	P201-24A	LP226	KG242K-E	KJ234K	KF203-E	KJ203-E	KD301	KJ208	KJ219	KR209	DCX27#11*2
	514M2-24/TG	E229	D210	D207	H204	P254J-4A	LP226	KG242K-E	KJ234K	KF203-E	KJ203-E	KD301	KJ208	KJ219	KR209	DCX27#11*2
	514M2-25	E208	D210	D207	H204	P201-25A	LP226	KG242K-E	KJ234K	KF203-E	KJ203-E	KD301	KJ208	KJ219	KR209	DCX27#11*2
	514M2-28	E230	D210	D207	H204	P201-8A	LP227A	KG242K-E	KJ204K	KF203-E	KJ203-E	KD301A	KJ228	KJ238	KR209	DCX27#11*2
	514M4-23	E209	D210	D207	H204	P201-23A	LP226	KG242K-E	KJ234K	KF203-E	KJ203-E	KD301	KJ208	KJ219	KR209	DCX27#11*2
	514M5-23/BK	E210	D203	D207	H203	P202Q-A	LP226	KG242K-E	KJ234K	KF203-E	KJ203-E	KD301	KJ208	KJ219	KR209	DCX27#11*2
	514M5-23/BK-1	E210	D203	D207	H203	P202Q-A	LP226	KG242K-E	KJ234K	KF203-E	KJ203-E	KD301	KJ208	KJ219	BK239	DCX27#11*2
	514M5-23/BKS	E210Q	D203	D207	H203	P202Q-A	LP226	KG242K-E	KJ234K	KF203-E	KJ203-E	KD301	KJ208	KJ219	BK309	DCX27#11*2
	514M7-24	E226	D212	D207	H210	P201-A	LP230	KG242K-E	KJ204K	KF203-E	KJ203-E	KD301A	KJ228	KJ238	KR209	DCX27#16*2

SiRUBA GAGE PARTS LIST	Series	Remark	Page	Date
	700Q		1 / 2	2012/12/25

	機　型 Model	針板 Needle Plate	送具 Feed Dog	送具 Feed Dog	押具 Presser Foot	勾針 Looper	針鐺 Needle Clamp	束環 Coller	衝程 Crank	衝程 Crank	大心 Crank Shaft	勾針連桿座 Upper Looper Holder	過線件 Thread Guide	下刀架 Lower Knift Holder	針 Needle
737Q	503M2-04	E222	D210	D207	H204	P201-14A	LP231	KG231K-E	KJ204	KF203-E	KJ206-E	KD301	KJ236	KJ219	KR209	DCX27#11
	504F1-04	E206	D201	D207	H201	P201-14A	LP225	KG231K-E	KJ204	KF203-E	KJ206-E	KD301	KJ236	KJ219	KR209	DCX27#9
	504F1-15	E233K	D201	D217	H201	P214P-A	LP225	KG231K-E	KJ204	KF203-E	KJ206-E	KD301	KJ236	KJ219	KR209	DCX27#9
	504F2-02/GAL-Q	E233K	D201	D217	H201	P214P-2A	LP225	KG231K-E	KJ204	KF203-E	KJ206-E	KD301	KJ236	KJ219	KR209	DCX27#9
	504M1-15	E207	D201	D209	H201	P211-A	LP225	KG231K-E	KJ204	KF203-E	KJ206-E	KD301	KJ236	KJ219	KR209	DCX27#9
	504M2-04	E222	D210	D207	H204	P201-14A	LP225	KG231K-E	KJ204	KF203-E	KJ206-E	KD301	KJ236	KJ219	KR209	DCX27#11
	504M2-04/TR	E222	D210	D207	H204	P216-3	LP225	KG231K-E	KJ204	KF203-E	KJ206-E	KD301	KJ236	KJ219	KR209	DCX27#11
	504M3-04	E220	D210	D209	H204	P201-14A	LP225	KG231K-E	KJ204	KF203-E	KJ206-E	KD301	KJ236	KJ219	KR209	DCX27#11
	504M3-05	E221	D210	D209	H204	P201-14A	LP225	KG231K-E	KJ204	KF203-E	KJ206-E	KD301	KJ236	KJ219	KR209	DCX27#11
	504M3-05/PZ	E221	D210	D209	H204	P257-A	LP225	KG231K-E	KJ204	KF203-E	KJ206-E	KD301	KJ236	KJ219	KR209	DCX27#18
	504M5-04/BK	E232	D203	D207	H203	P202Q-2A	LP225	KG231K-E	KJ204	KF203-E	KJ206-E	KD301	KJ236	KJ219	KR209	DCX27#11
	504M5-04/BK-1	E232	D203	D207	H203	P202Q-2A	LP225	KG231K-E	KJ204	KF203-E	KJ206-E	KD301	KJ236	KJ219	BK239	DCX27#11
	505F1-04	E206	D201	D207	H201	P203-A	LP225	KG231K-E	KJ204	KF203-E	KJ206-E	KD301	KJ236	KJ219	KR209	DCX27#9
747Q	512M1-25	E208	D210	D207	H204	P201-A	LP228	KG242K-E	KJ204	KF215-E	KJ203-E	KD301	KJ208	KJ219	KR209	DCX27#11*2
	512M1-34	E236	D210	D207	H204	P214-A	LP228	KG254K-E	KJ204	KF215-E	KJ203-E	KD301	KJ208	KJ219	KR209	DCX27#14*2
	514F1-24	E212K	D210	D207	H204	P201-A	LP226	KG242K-E	KJ234K	KF203-E	KJ203-E	KD301	KJ208	KJ219	KR209	DCX27#11*2
	514H4-24/GA	E229	D202	D207	H202	P204-A	LP226	KG242K-E	KJ234K	KF203-E	KJ203-E	KD301	KJ208	KJ219	KR209	DCX27#11*2
	514H4-24/GAP	E229	D202	D207	H202	P204P-A	LP226	KG242K-E	KJ234K	KF203-E	KJ203-E	KD301	KJ208	KJ219	KR209	DCX27#11*2
	514M2-24	E229	D210	D207	H204	P201-A	LP226	KG242K-E	KJ234K	KF203-E	KJ203-E	KD301	KJ208	KJ219	KR209	DCX27#11*2
	514M2-24/TG	E229	D210	D207	H204	P254J-4A	LP226	KG242K-E	KJ234K	KF203-E	KJ203-E	KD301	KJ208	KJ219	KR209	DCX27#11*2
	514M2-25	E208	D210	D207	H204	P201-A	LP226	KG242K-E	KJ234K	KF203-E	KJ203-E	KD301	KJ208	KJ219	KR209	DCX27#11*2
	514M2-28	E230	D210	D207	H204	P201-8A	LP227A	KG242K-E	KJ204K	KF203-E	KJ203-E	KD301A	KJ228	KJ238	KR209	DCX27#11*2
	514M4-23	E209	D210	D207	H204	P201-2A	LP226	KG242K-E	KJ234K	KF203-E	KJ203-E	KD301	KJ208	KJ219	KR209	DCX27#11*2
	514M5-23/BK	E210	D203	D207	H203	P202Q-A	LP226	KG242K-E	KJ234K	KF203-E	KJ203-E	KD301	KJ208	KJ219	KR209	DCX27#11*2
	514M5-23/BK-1	E210	D203	D207	H203	P202Q-A	LP226	KG242K-E	KJ234K	KF203-E	KJ203-E	KD301	KJ208	KJ219	BK239	DCX27#11*2
	514M5-23/BKS	E210Q	D203	D207	H203	P202Q-A	LP226	KG242K-E	KJ234K	KF203-E	KJ203-E	KD301	KJ208	KJ219	BK309	DCX27#11*2
	514M7-24	E226	D212	D207	H210	P201-A	LP230	KG242K-E	KJ204K	KF203-E	KJ203-E	KD301A	KJ228	KJ238	KR209	DCX27#16*2

SiRUBA GAGE PARTS LIST	Series	Remark	Page	Date
	988Q		2 / 2	2012/10/04

	機型 Model	針板 Needle Plate	送具 Feed Dog		送具 Feed Dog	押具 Presser Foot	勾針 Looper	針鐺 Needle Clamp	束環 Coller	衝程 Crank	衝程 Crank	大心 Crank Shaft	勾針連桿座 Upper Looper Holder	過線件 Thread Guide	下刀架 Lower Knift Holder	針 Needle
988Q-4T	514M7-24/BK	E247	D203	D207	H203	P202Q-A	LP230	KG242K-E	KJ204K	KF203-E	KJ203-E	KD301A	KJ228	KJ238	KR209	DCX27#16*2
	514M7-24/BK-1	E247	D203	D207	H203	P202Q-A	LP230	KG242K-E	KJ204K	KF203-E	KJ203-E	KD301A	KJ228	KJ238	BK239	DCX27#16*2
	514M7-24/BKS	E247Q	D203	D207	H203	P202Q-A	LP230	KG242K-E	KJ204K	KF203-E	KJ203-E	KD301A	KJ228	KJ238	BK309	DCX27#16*2
	514M7-24/TG	E226	D212	D207	H210	P254J-4A	LP230	KG242K-E	KJ204K	KF203-E	KJ203-E	KD301A	KJ228	KJ238	KR209	DCX27#16*2
	514M7-25	E225	D212	D207	H210	P201-A	LP230	KG242K-E	KJ204K	KF203-E	KJ203-E	KD301A	KJ228	KJ238	KR209	DCX27#16*2
	514M7-25/BK	E248	D203	D207	H203	P202Q-A	LP230	KG242K-E	KJ204K	KF203-E	KJ203-E	KD301A	KJ228	KJ238	KR209	DCX27#16*2
	514M7-25/BK-1	E248	D203	D207	H203	P202Q-A	LP230	KG242K-E	KJ204K	KF203-E	KJ203-E	KD301A	KJ228	KJ238	BK239	DCX27#16*2
	514M7-25/BKS	E248Q	D203	D207	H203	P202Q-A	LP230	KG242K-E	KJ204K	KF203-E	KJ203-E	KD301A	KJ228	KJ238	BK309	DCX27#16*2
988Q-5T	401M1/TW	E237	D219		H219	P506-A		KG253K-E	KJ204	KF203-E	KJ206-E	KD301	TW201			DCX27#14
	516H4-35/GA	E213	D204	D207	H205	P508J-A	LP226	KG253K-E	KJ204	KF203-E	KJ206-E	KD301	KJ236	KJ219	KR219	DCX27#14*2
	516H4-35/GAP	E213	D204	D207	H205	P508JP-A	LP226	KG253K-E	KJ204	KF203-E	KJ206-E	KD301	KJ236	KJ219	KR219	DCX27#14*2
	516H4-55/GA	E214	D205	D207	H206	P509J-A	LP226	KG255K-E	KJ204	KF203-E	KJ206-E	KD301	KJ236	KJ219	KR219	DCX27#14*2
	516H4-55/GAP	E214	D205	D207	H206	P509JP-A	LP226	KG255K-E	KJ204	KF203-E	KJ206-E	KD301	KJ236	KJ219	KR219	DCX27#14*2
	516L1-24	E215	D206	D207	H207	P500J-A	LP225	KG252K-E	KJ204	KF203-E	KJ206-E	KD301	KJ236	KJ219	KR219	DCX27#14*2
	516L1-35	E216	D206	D207	H212	P504J-A	LP225	KG253K-E	KJ204	KF203-E	KJ206-E	KD301	KJ236	KJ219	KR219	DCX27#14*2
	516M2-35	E217	D208	D207	H208	P504J-A	LP226	KG253K-E	KJ204	KF203-E	KJ206-E	KD301	KJ236	KJ219	KR219	DCX27#14*2
	516M2-35/PS	E227	D208	D207	H214	P504JS-A	LP226	KG253K-E	KJ204	KF203-E	KJ206-E	KD301	KJ236	KJ219	KR219	DCX27#14*2
	516M2-55	E218	D208	D207	H209	P502J-A	LP226	KG255K-E	KJ204	KF203-E	KJ206-E	KD301	KJ236	KJ219	KR219	DCX27#14*2
	516M2-55/PS	E228	D208	D207	H215	P502JS-A	LP226	KG255K-E	KJ204	KF203-E	KJ206-E	KD301	KJ236	KJ219	KR219	DCX27#14*2
	516X2-56	E234	D216A	D207	H220A	P962-A	LP230	KG255K-E	KJ234K KJ234	KF203-E	KJ206-E	KD301A	KJ236	KJ238	KR223	DCX27#18*2
	401M2-50/TA	E238	D211	D222	H216	P223-A		KG256K-E	KJ204	KF203-E	KJ206-E	KD301	TW201		KR219	DCX27#14*2
988Q-6T	516M2-324	E219	D208	D207	H209	P233J-A	LP226	KG433K-E	KJ234K	KF203-E	KJ203-E	KD301	KJ208	KJ219	KR219	DCX27#11*3
	516M2-524	E224	D208	D207	H209	P255J-A	LP226	KG455K-E	KJ234K	KF203-E	KJ203-E	KD301	KJ208	KJ219	KR219	DCX27#11*3

SiRUBA PARTS LIST	Series	Parts Group	Subclass / Remark	Page
	700Q/988Q	KA		1/1
				Date
				2012/10/31

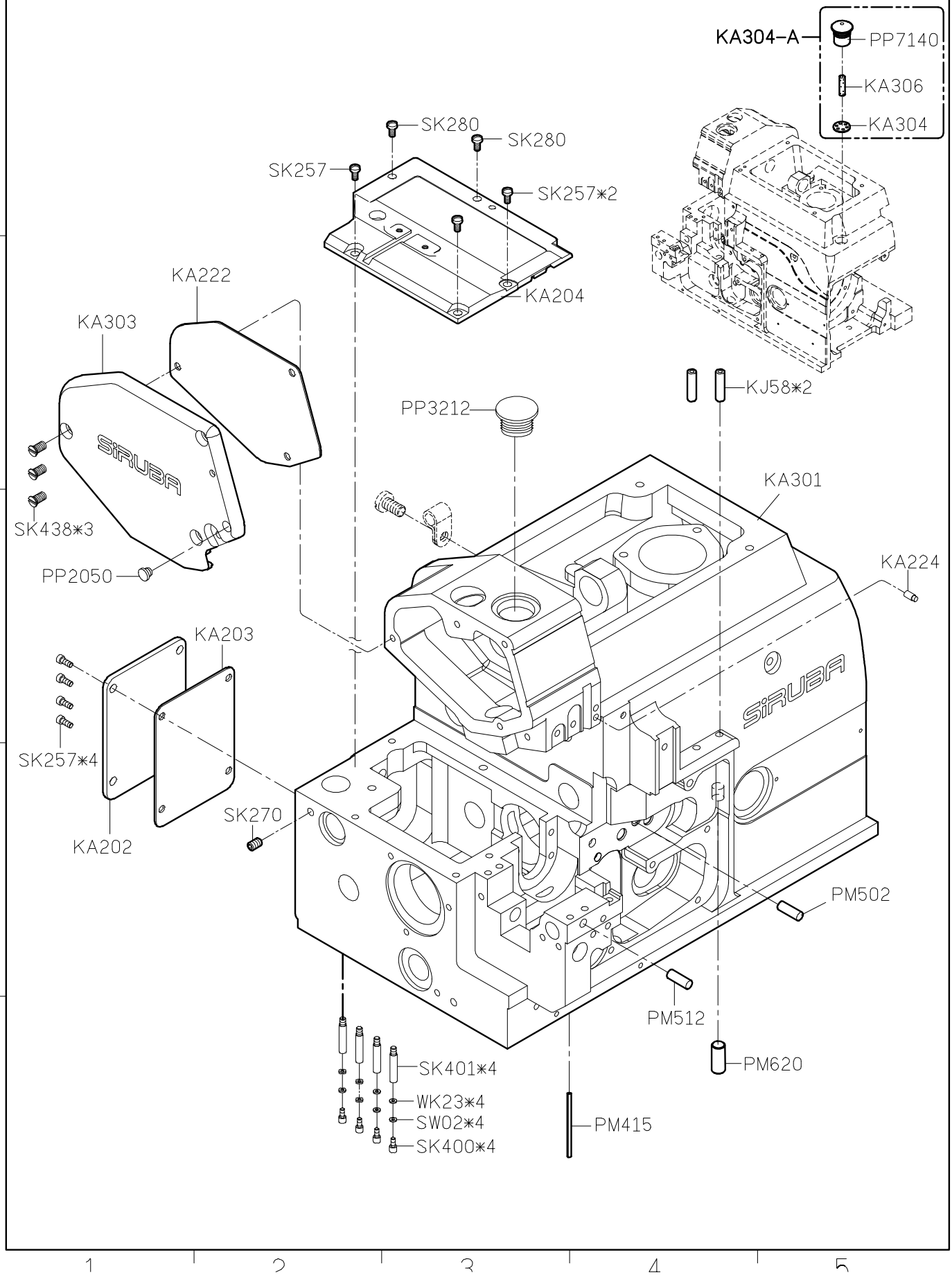

SIRUBA PARTS LIST	Series	Parts Group	Subclass / Remark	Page
	700Q/988Q	KB		1/1
				Date
				2012/08/29

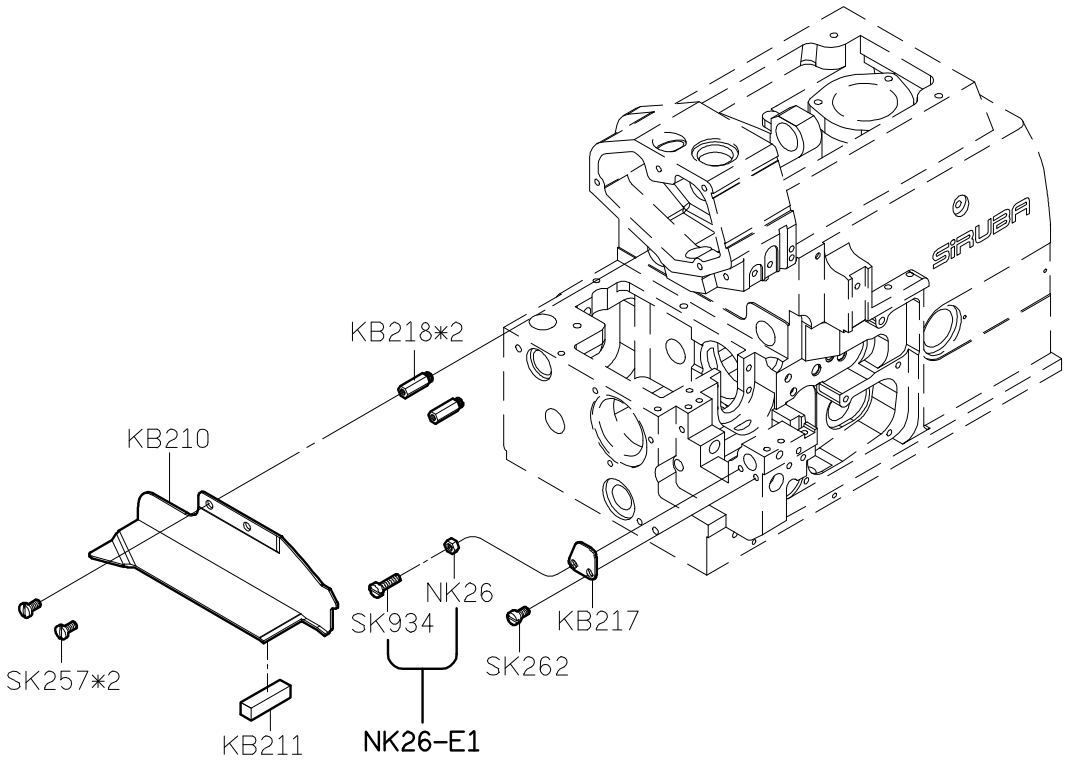

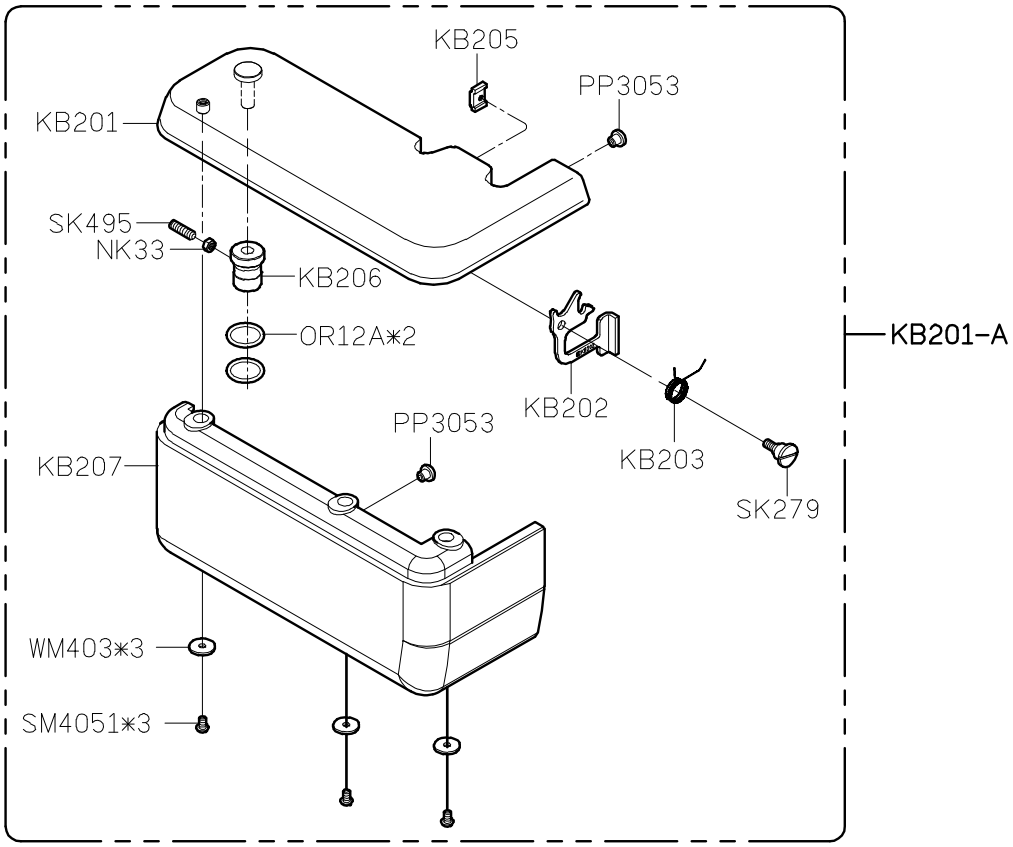

SIRUBA PARTS LIST	Series	Parts Group	Subclass / Remark	Page
	700Q/988Q	KC		1/1
				Date
				2012/11/01

MODEL	#3/#4	#5/#6
PARTS NO	KC209	KC219
	KC303-A	KC303-A1

MODEL	700Q	988Q
PARTS NO	KC309	KC309C

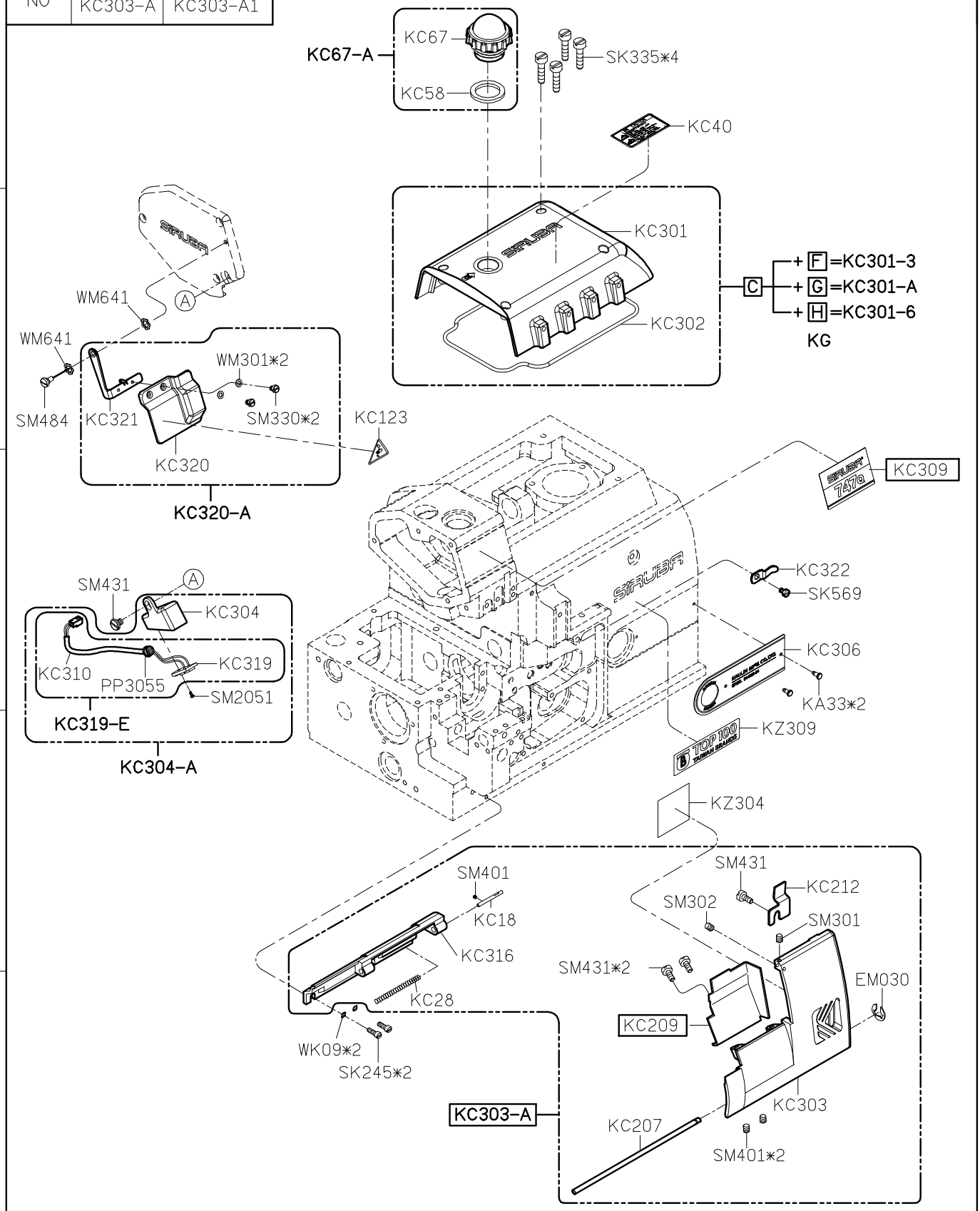

SiRUBA PARTS LIST	Series	Parts Group	Subclass / Remark	Page
	700Q/988Q	KD		1/3
				Date
				2012/09/25

MODEL	#3/#4	#5/#6
PARTS NO	KD204	KD217
	SM603B	KD220
	SK241*3	SK539*2 SK872*1

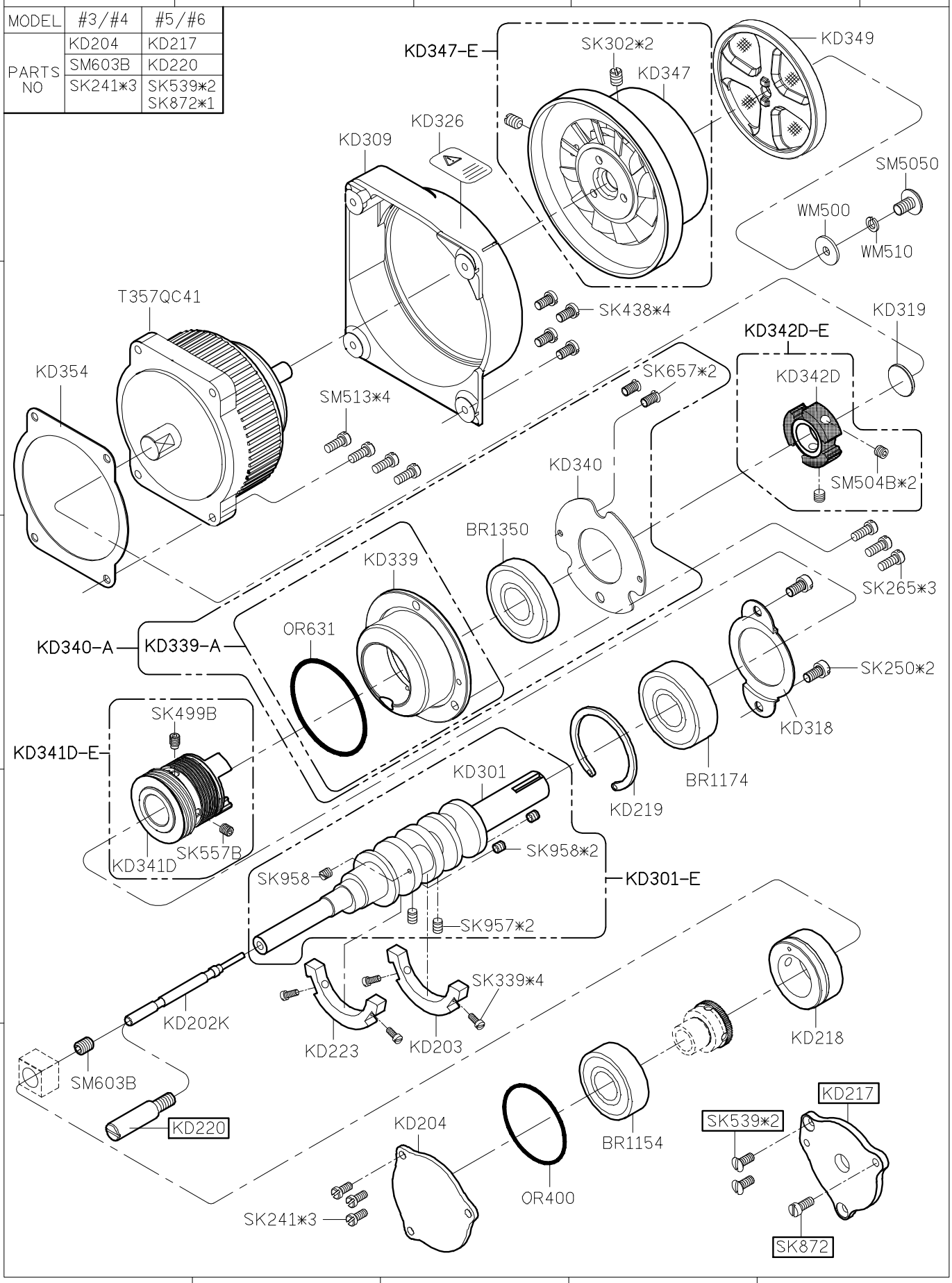

SiRUBA PARTS LIST	Series	Parts Group	Subclass / Remark	Page
	700Q/988Q	KD		2/3
				Date
				2012/11/01

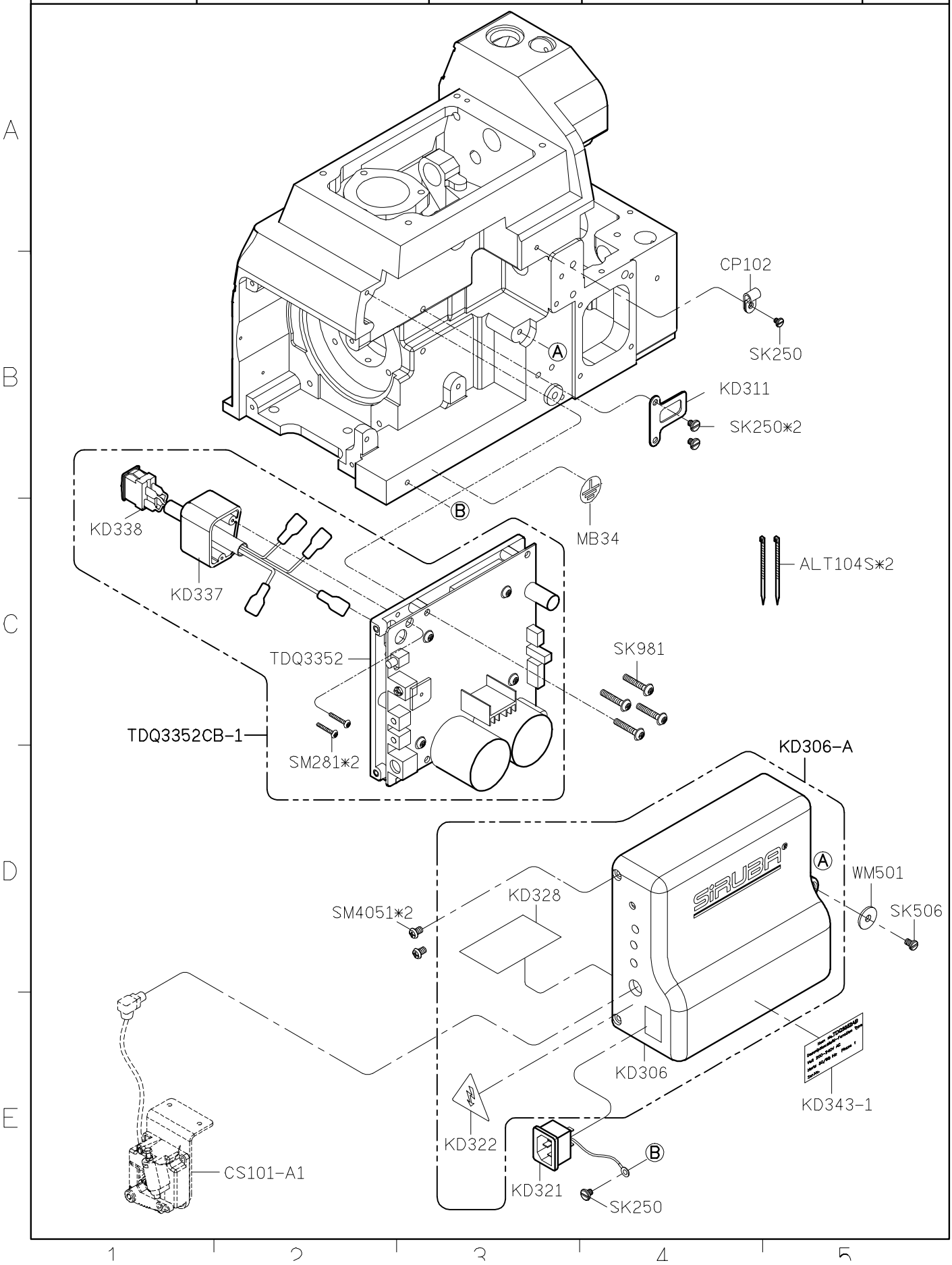

SiRUBA PARTS LIST	Series	Parts Group	Subclass / Remark	Page
	700Q/988Q	KD		3/3
				Date
				2012/08/29

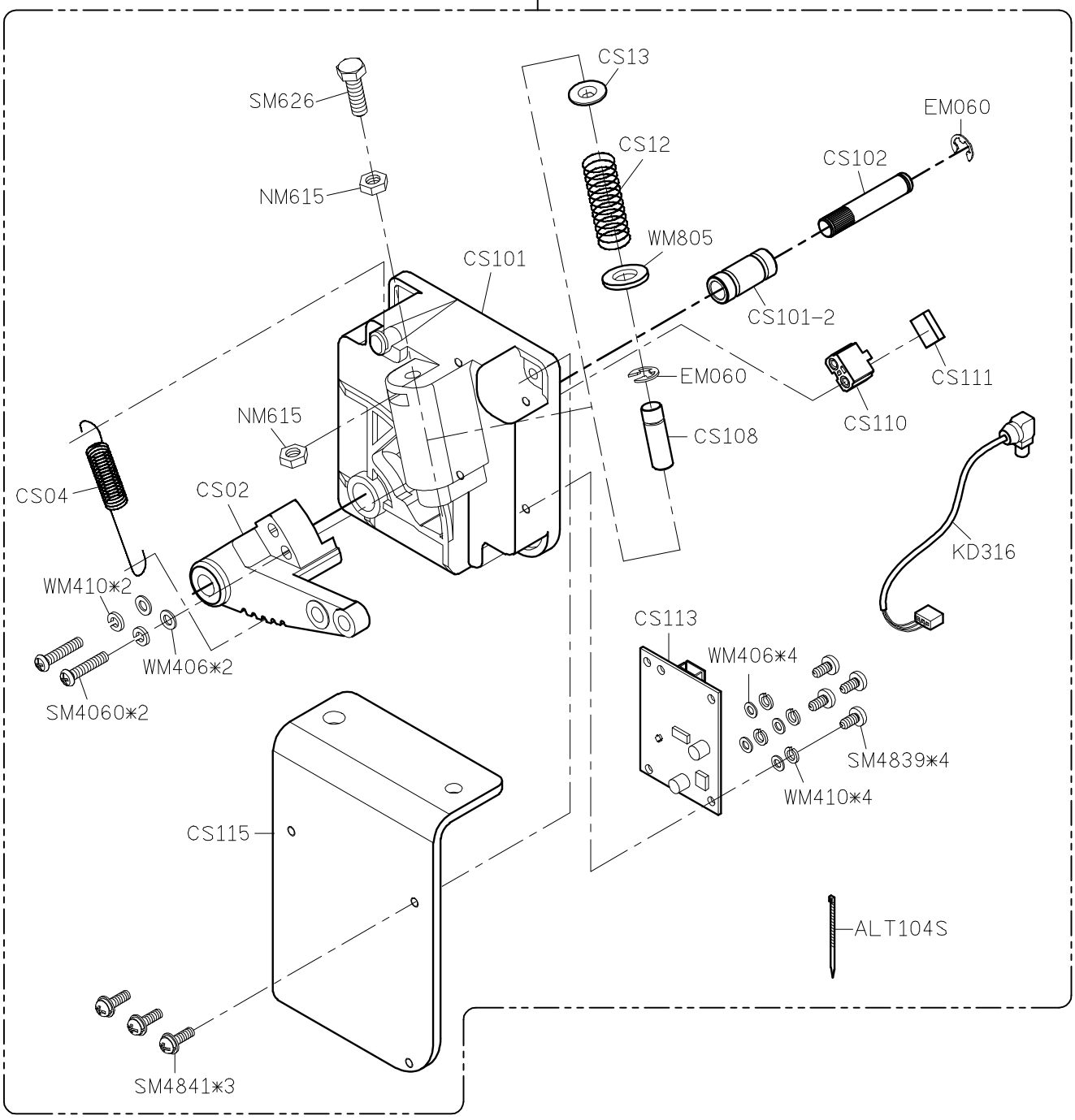

SiRUBA PARTS LIST	Series	Parts Group	Subclass / Remark	Page
	700Q/988Q	KF		1/1
				Date
				2012/08/16

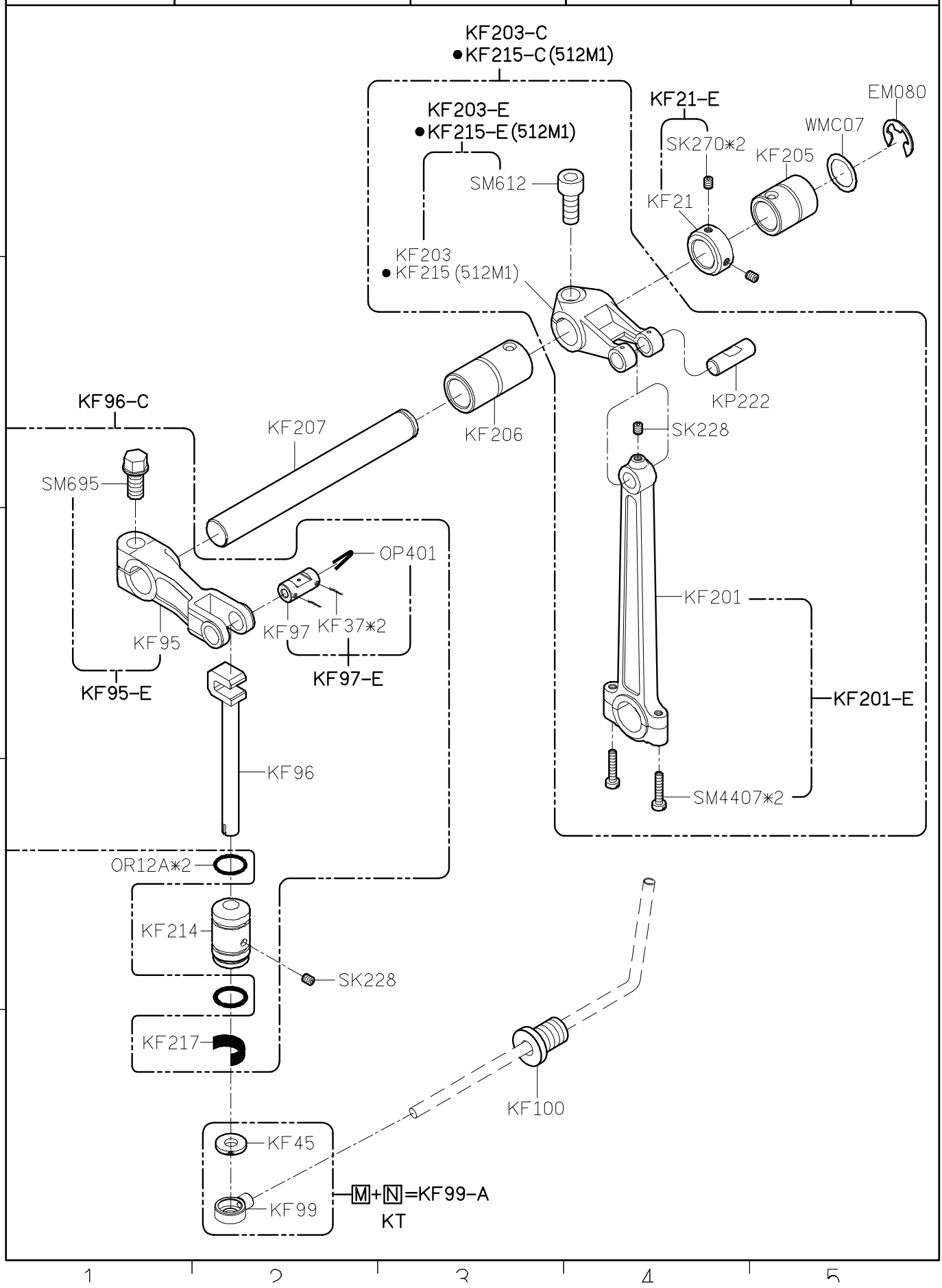

SIRUBA PARTS LIST	Series	Parts Group	Subclass / Remark	Page
	700Q/988Q	KG		1/1
				Date
				2012/08/30

MODEL	#3	#4	#5	#6
PARTS NO	KG237	KG211	KG237	KG211
	KG248	KG213	KG236	KG249
	KG250	KG221	KG243	KG251
	KG222	KG222	KG245	KG245
	KG225	KG225	KG261	KG261
	KG201	KG201	KG244	KG244
	KG93	KG92	KG94	KG94
	SK216	SK216	SK216*2	SK216*2
	SK250N	SK250N	SK250N*2	SK250N*2
	SK437N	SK437N	SK437 SK221N	SK437 SK221N
	SM251	SM251	SM250	SM250
	KG212-3	KG212-4	KG241-5	KG241-6
	KG223-4	KG223-4	KG223-5	KG223-5

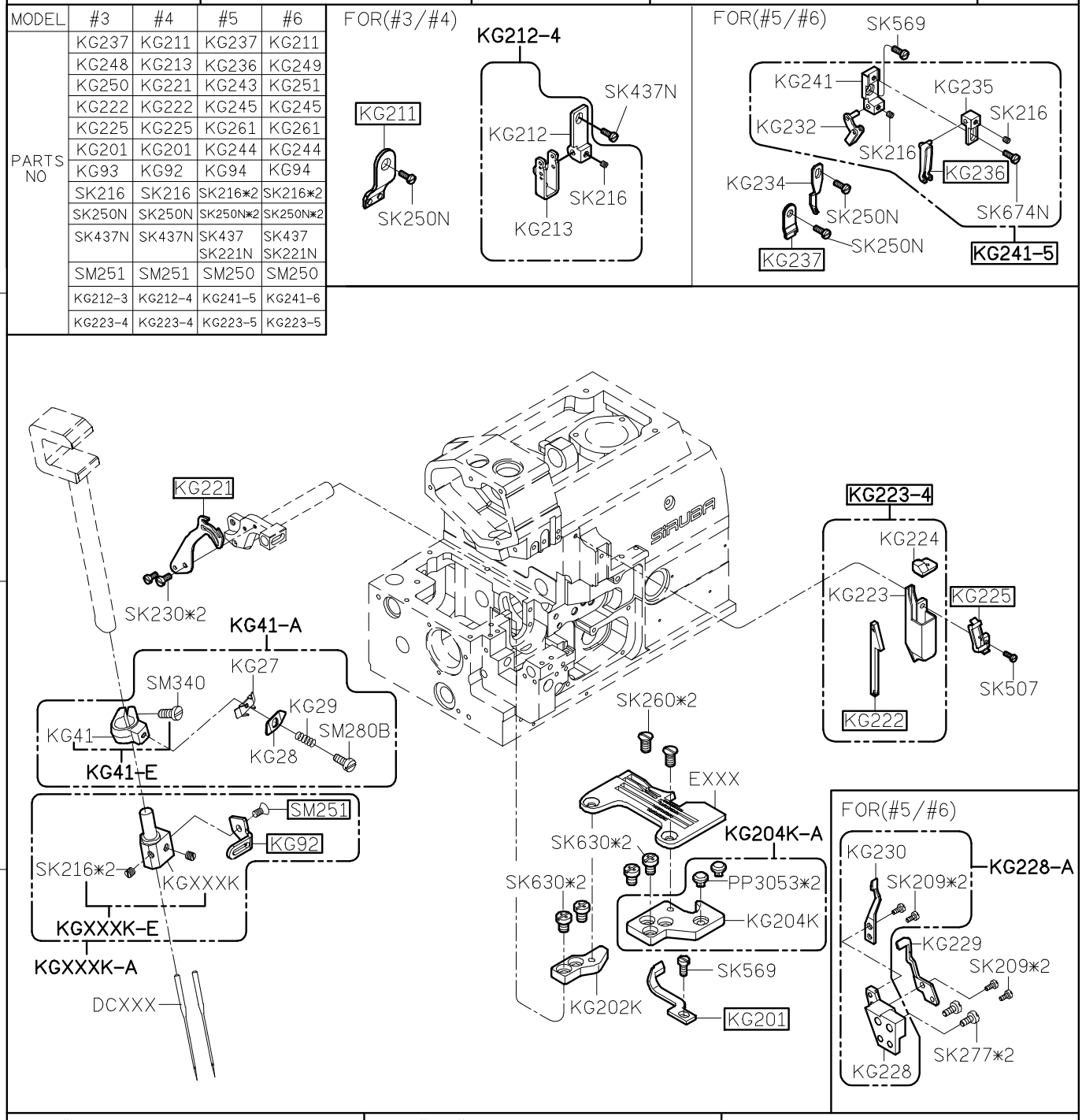

SIRUBA PARTS LIST	Series	Parts Group	Subclass / Remark	Page
	700Q/988Q	KJ		1/1
				Date
				2012/08/30

MODEL	#3/#5	#4/#6	#4 M7/M8/M2-28
PARTS NO	KJ204	KJ234K	KJ204K
	KJ206	KJ203	KJ203
	KJ206-E	KJ203-E	KJ203-E
	KJ206-C	KJ203-C	KJ203-C
	KJ236	KJ208	KJ228
	KJ236-C	KJ208-C	KJ228-C
	KJ219		KJ238

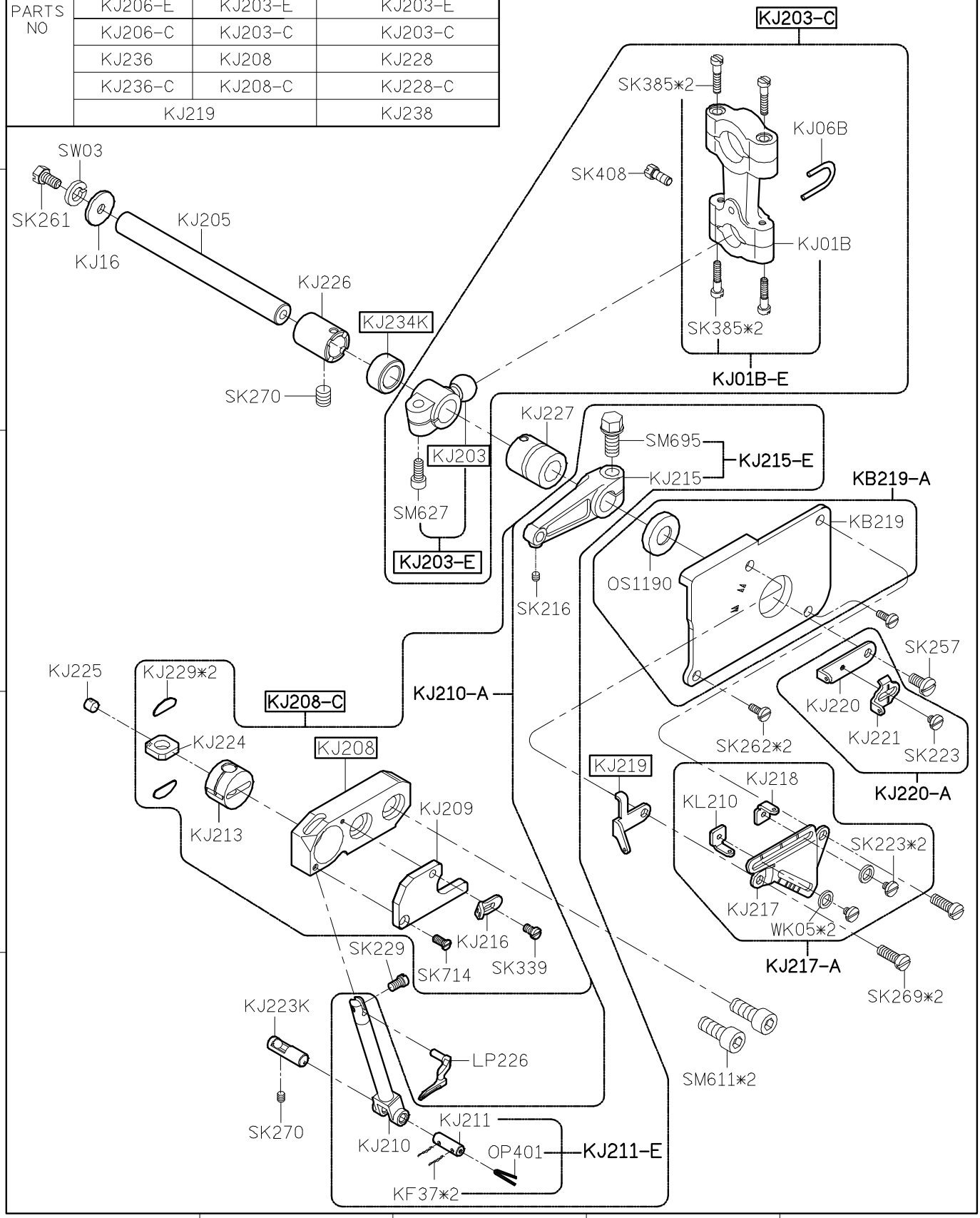

SIRUBA PARTS LIST	Series	Parts Group	Subclass / Remark	Page
	700Q/988Q	KL		1/1
				Date
				2012/08/30

MODEL	#3/#4	#5/#6	M7
PARTS NO	KL202		KL202A
	KL211-A		KL211-A1
	KL205	KL209	
		SK270	
	KL205-E	KL209-E	
	KL205-C	KL209-C	

KL KL KM
P+R+S =KL209-C
KL KL
P+Q =KL205-C

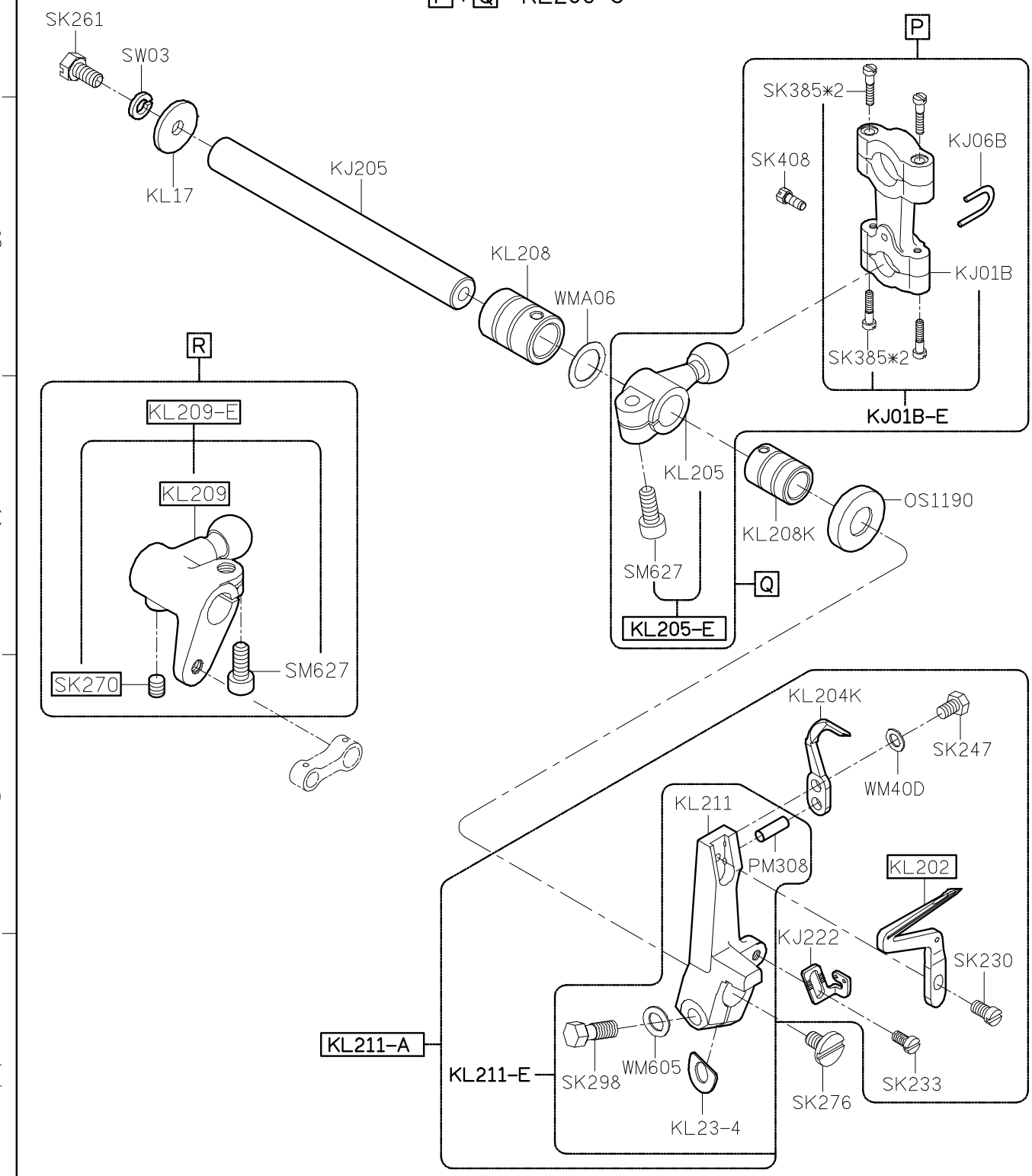

SIRUBA PARTS LIST	Series	Parts Group	Subclass / Remark	Page
	700Q/988Q	KM		1/1
				Date
				2012/08/30

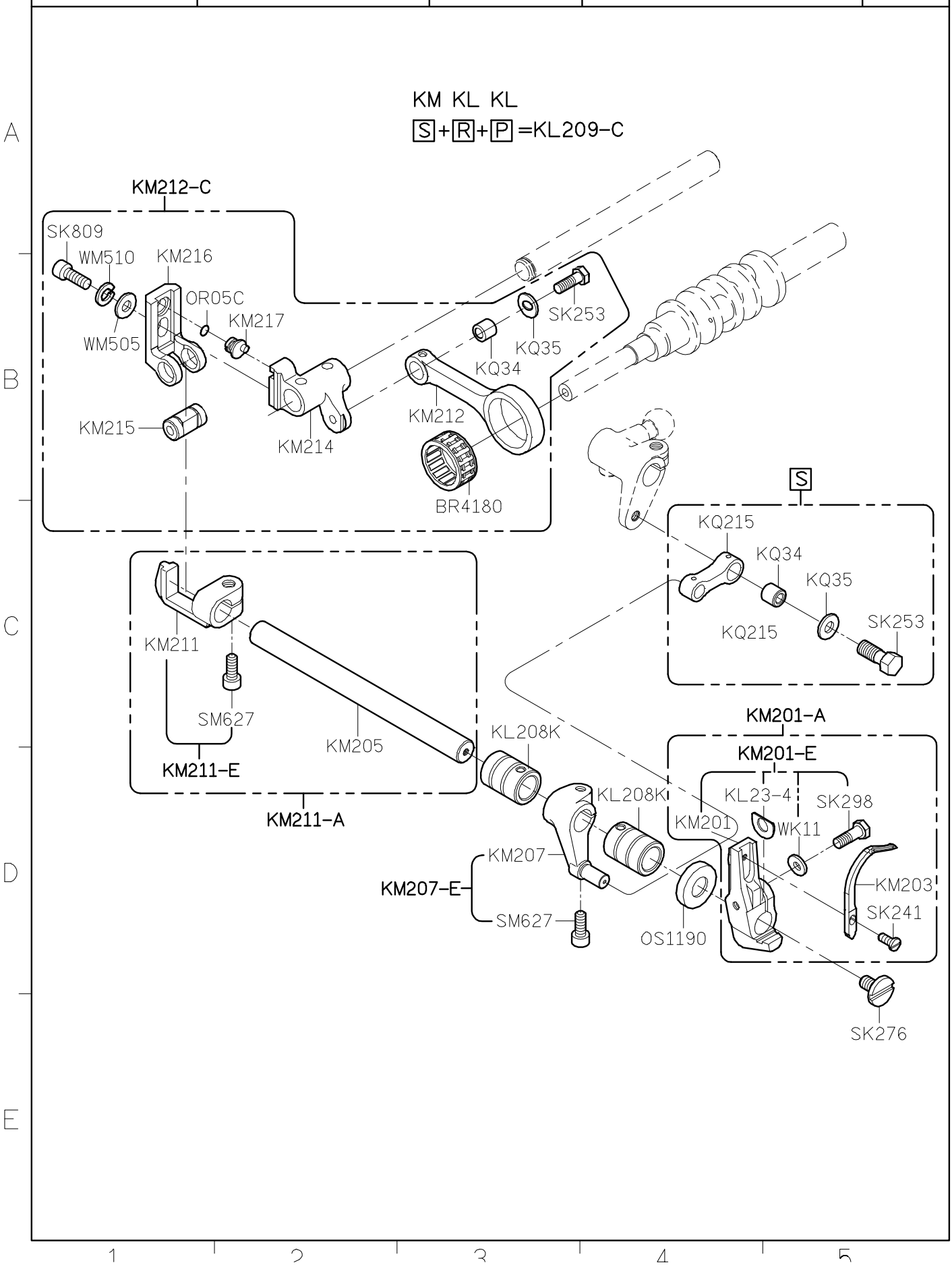

SIRUBA PARTS LIST	Series	Parts Group	Subclass / Remark	Page
	700Q/988Q	KN		1/1
				Date
				2012/10/04

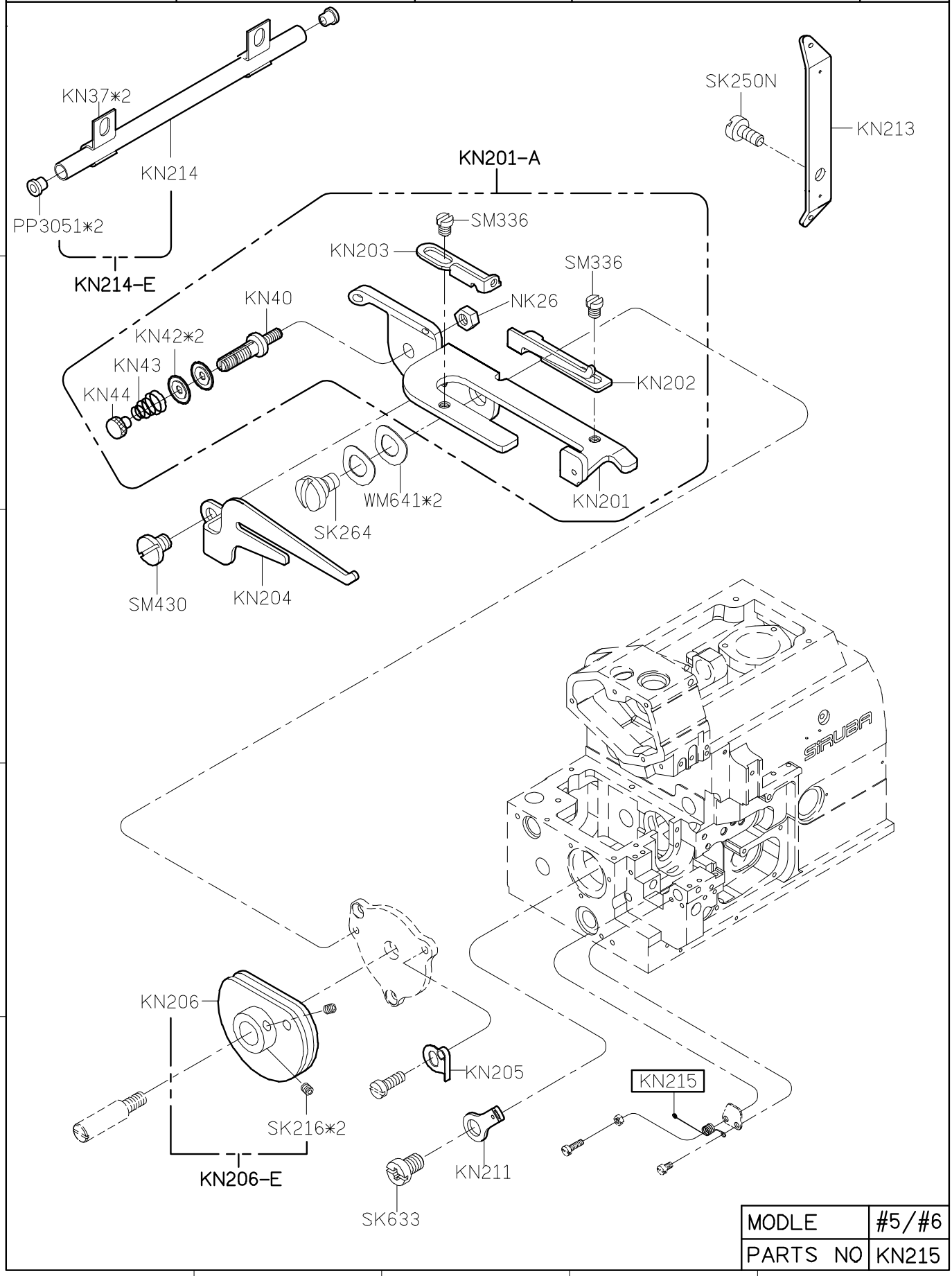

MODLE	#5/#6
PARTS NO	KN215

SIRUBA PARTS LIST	Series	Parts Group	Subclass / Remark	Page
	700Q/988Q	KP		1/1
				Date
				2012/09/25

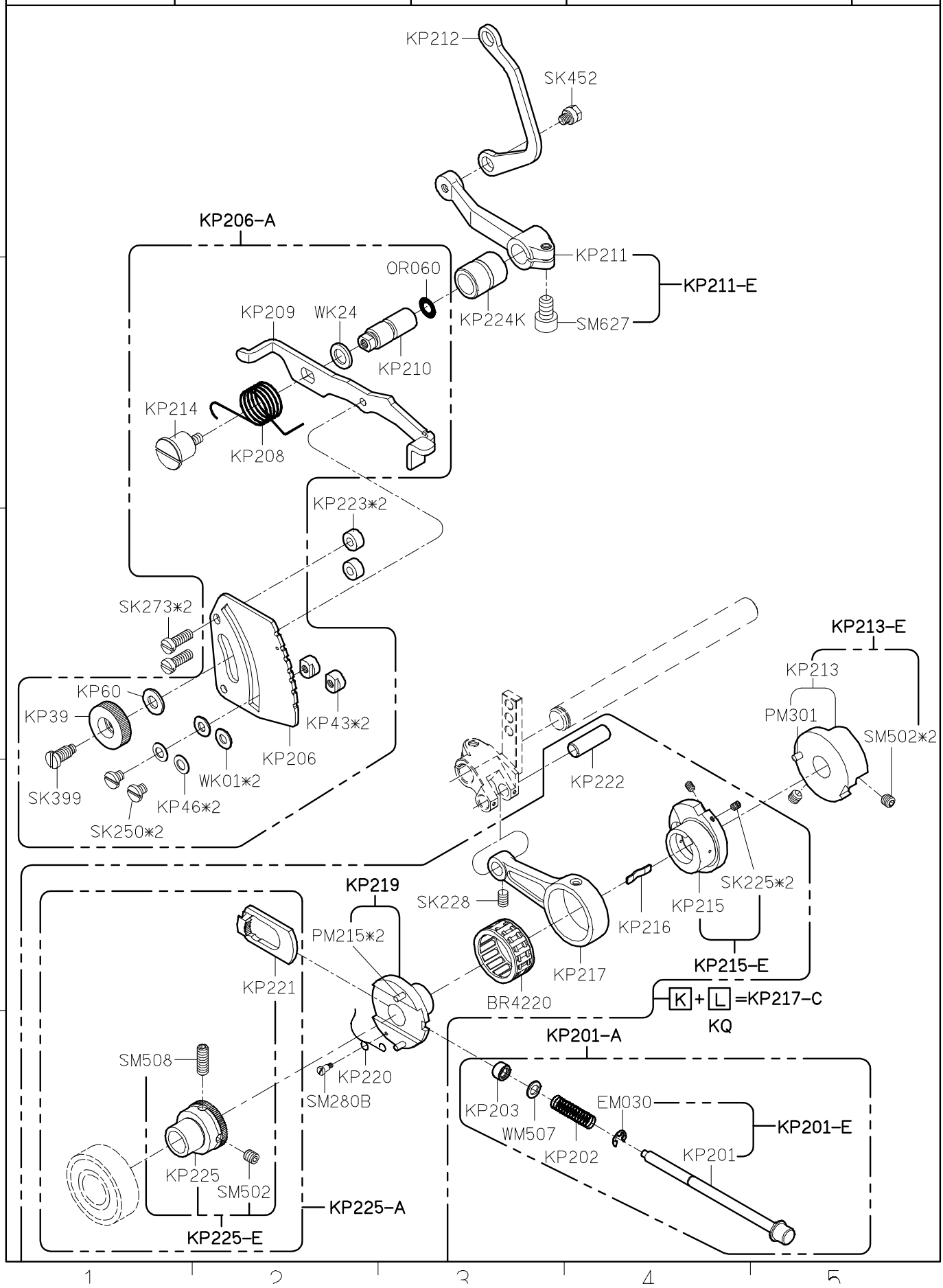

SIRUBA PARTS LIST	Series	Parts Group	Subclass / Remark	Page
	700Q/988Q	KQ		1/1
				Date
				2012/08/30

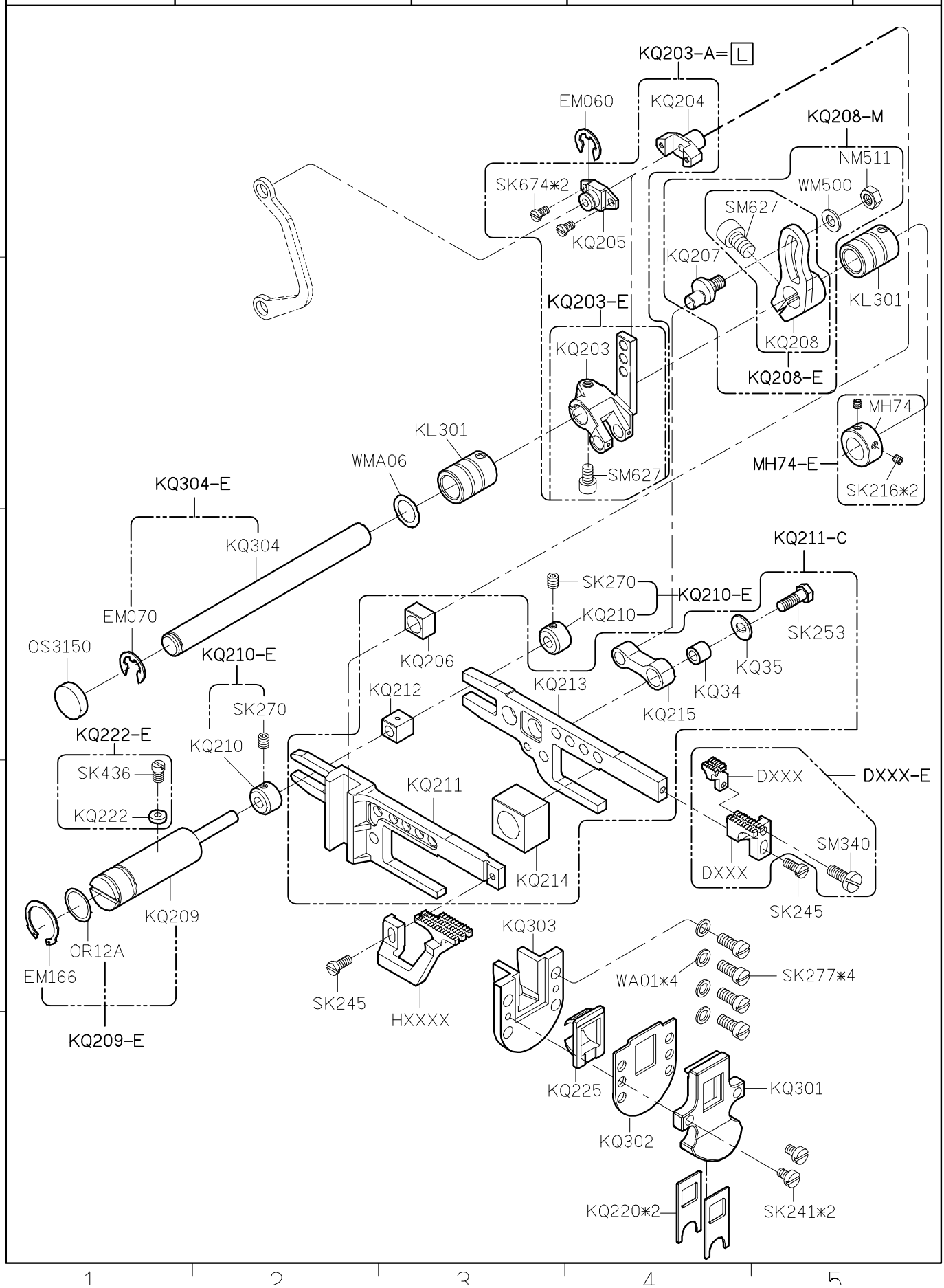

SIRUBA PARTS LIST	Series	Parts Group	Subclass / Remark	Page
	700Q/988Q	KR		1/1
				Date
				2012/08/30

MODEL	#3/#4	#5/#6
PARTS NO	KR202	KR218
	KR202-E	KR218-E
	KR206	KR221
	KR206-A	KR221-A
	KR209	KR219
	KR209-A	KR219-A

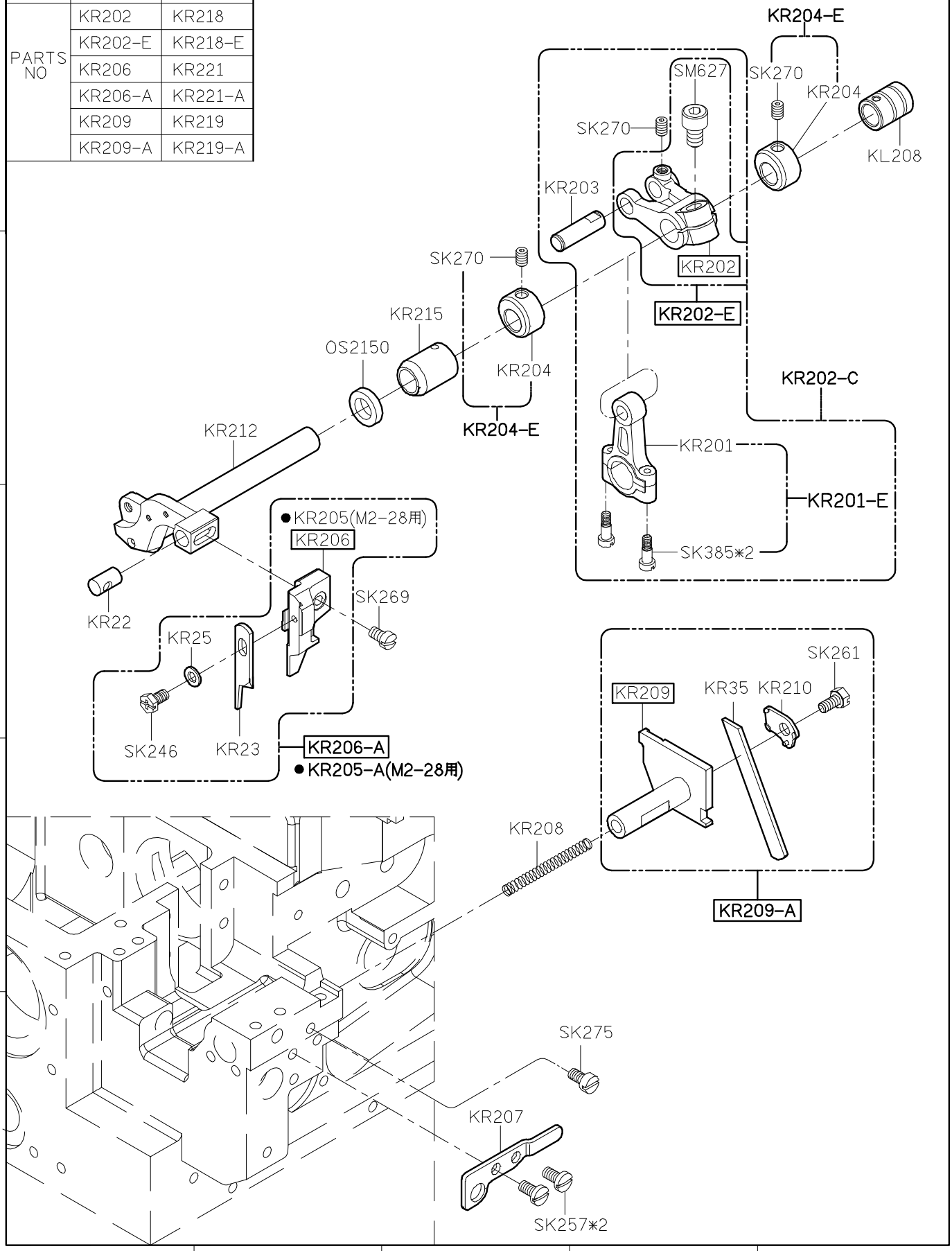

SIRUBA PARTS LIST	Series	Parts Group	Subclass / Remark	Page
	700Q/988Q	KS		1/1
				Date
				2012/08/30

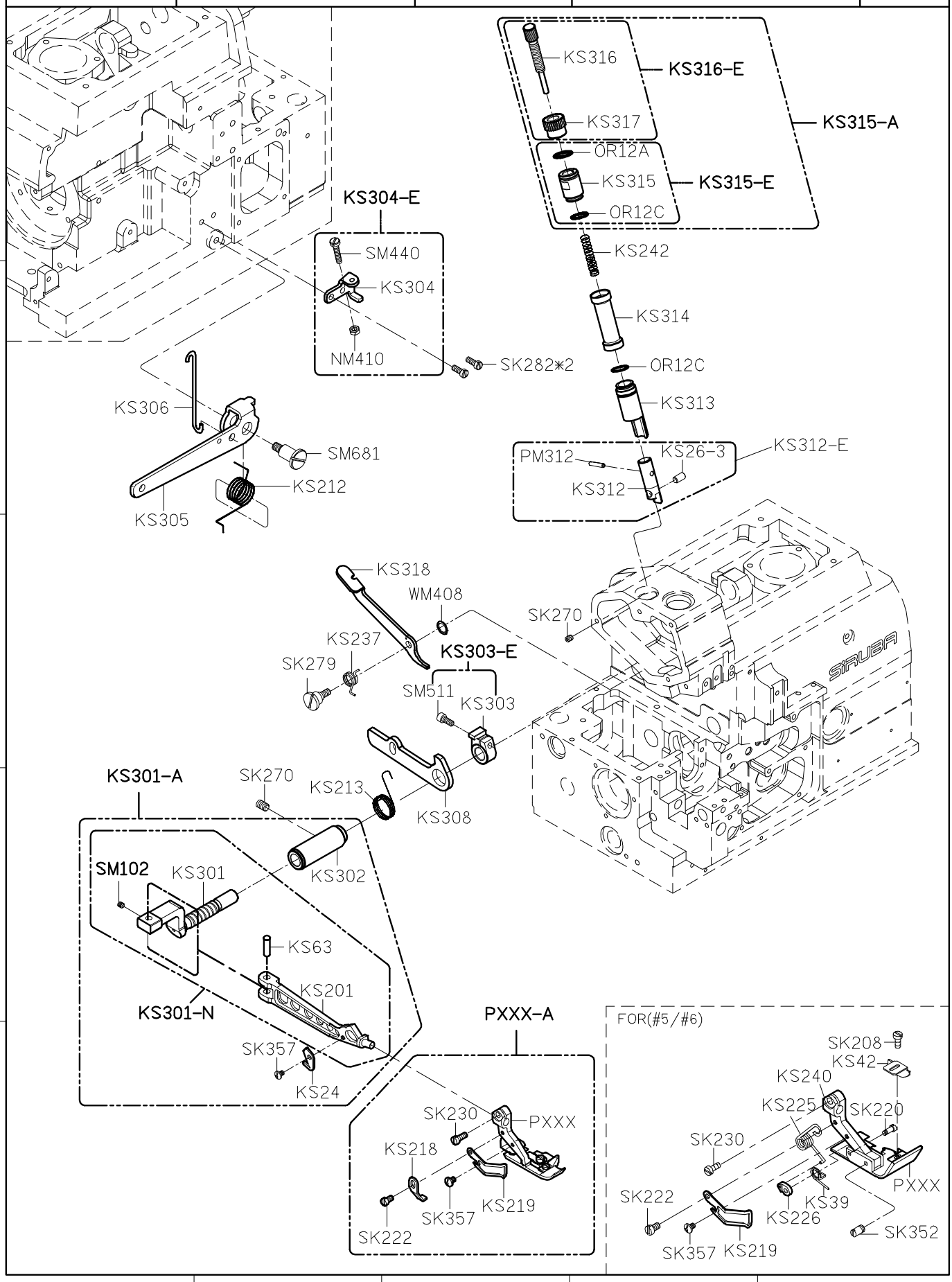

SIRUBA PARTS LIST	Series	Parts Group	Subclass / Remark	Page
	700Q/988Q	KT		1/1
				Date
				2012/08/30

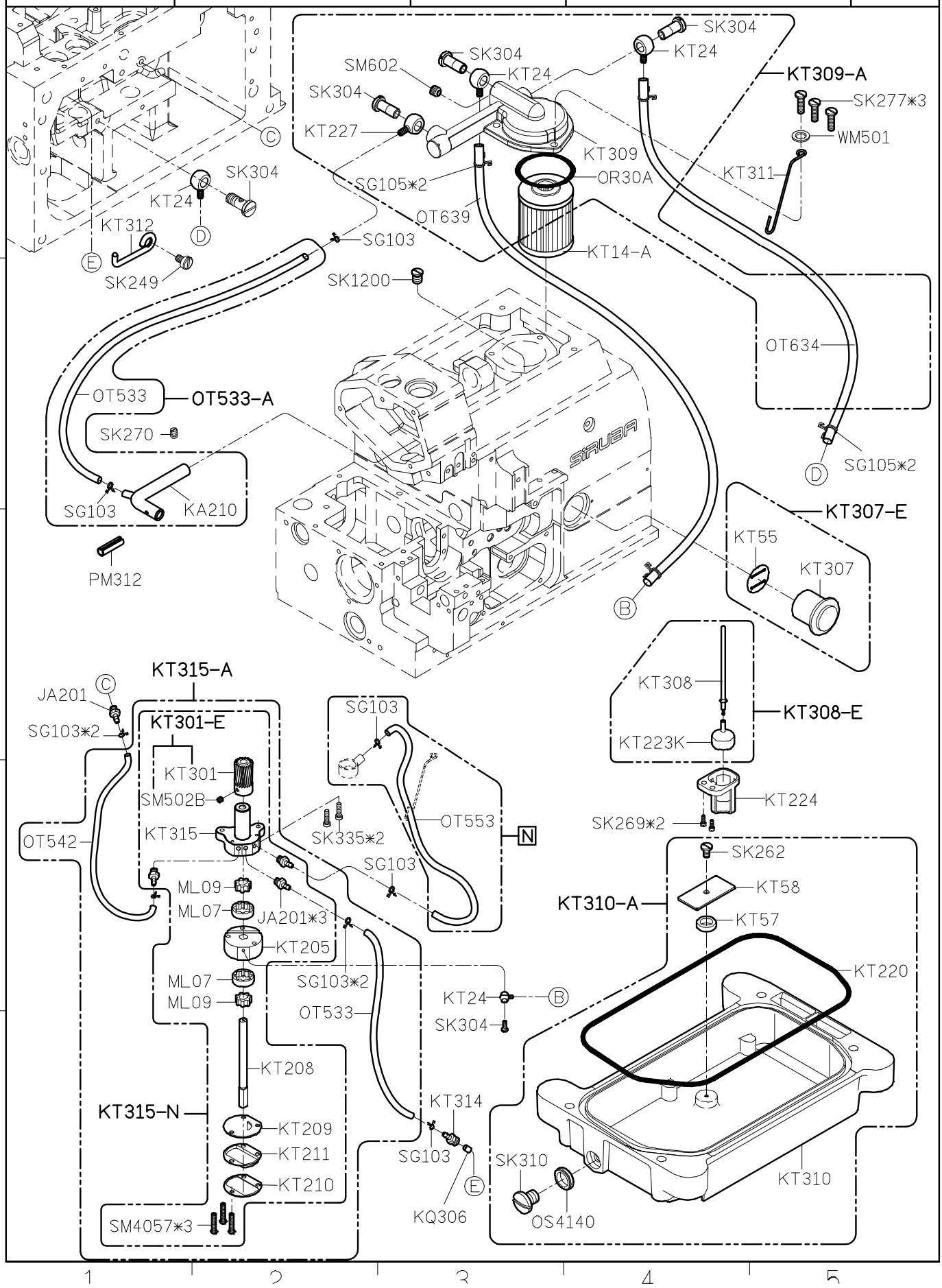

SIRUBA PARTS LIST	Series	Parts Group	Subclass / Remark	Page
	700Q/988Q	KU		1/1
				Date
				2012/08/30

MODEL	#3/#4	#5/#6
PARTS NO	KU207	KU209
	KU206	KU211
	KU201-4	KU201-5
	SK277	SK437

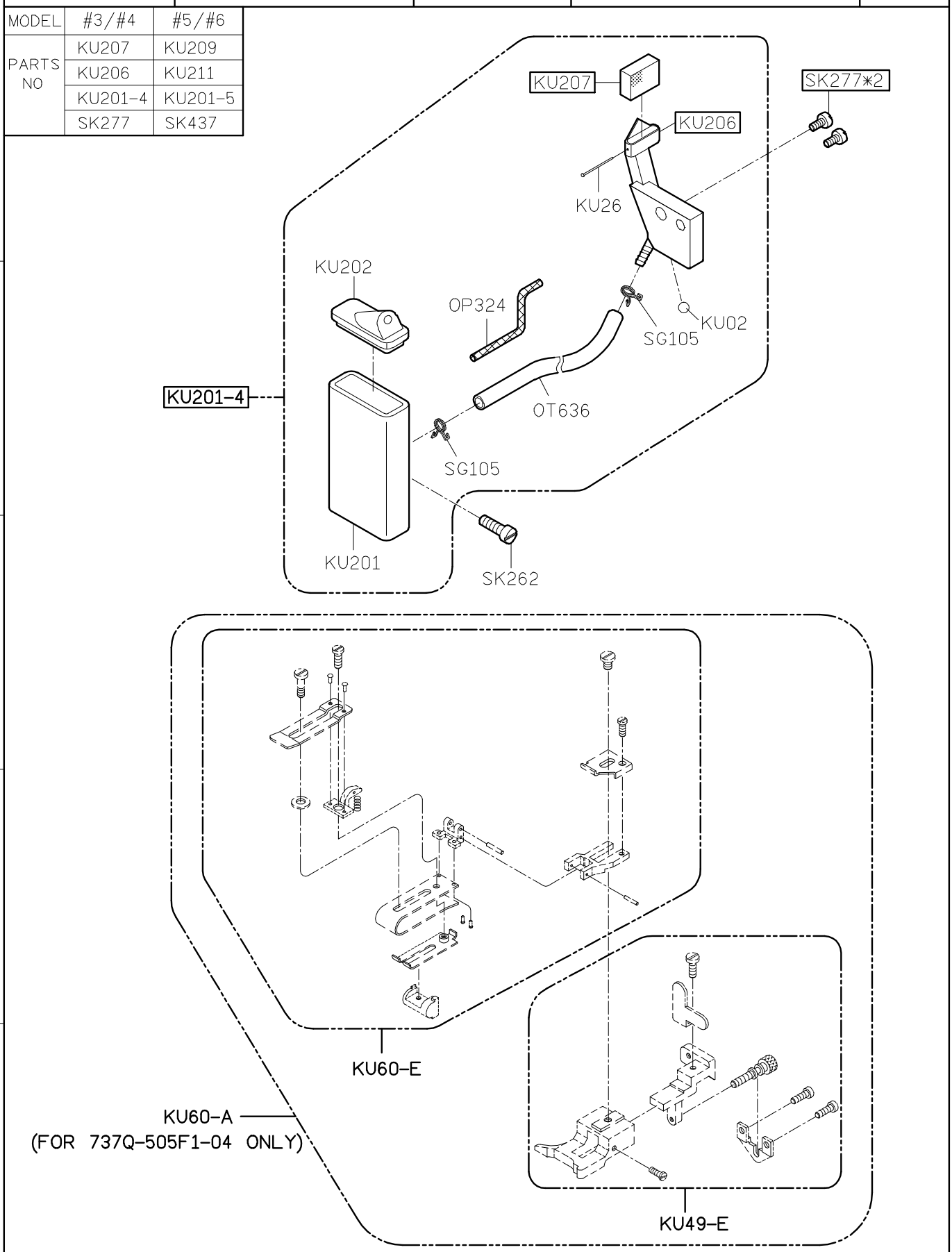

SIRUBA PARTS LIST	Series	Parts Group	Subclass / Remark	Page
	700Q/988Q	KX		1/1
				Date
				2012/08/30

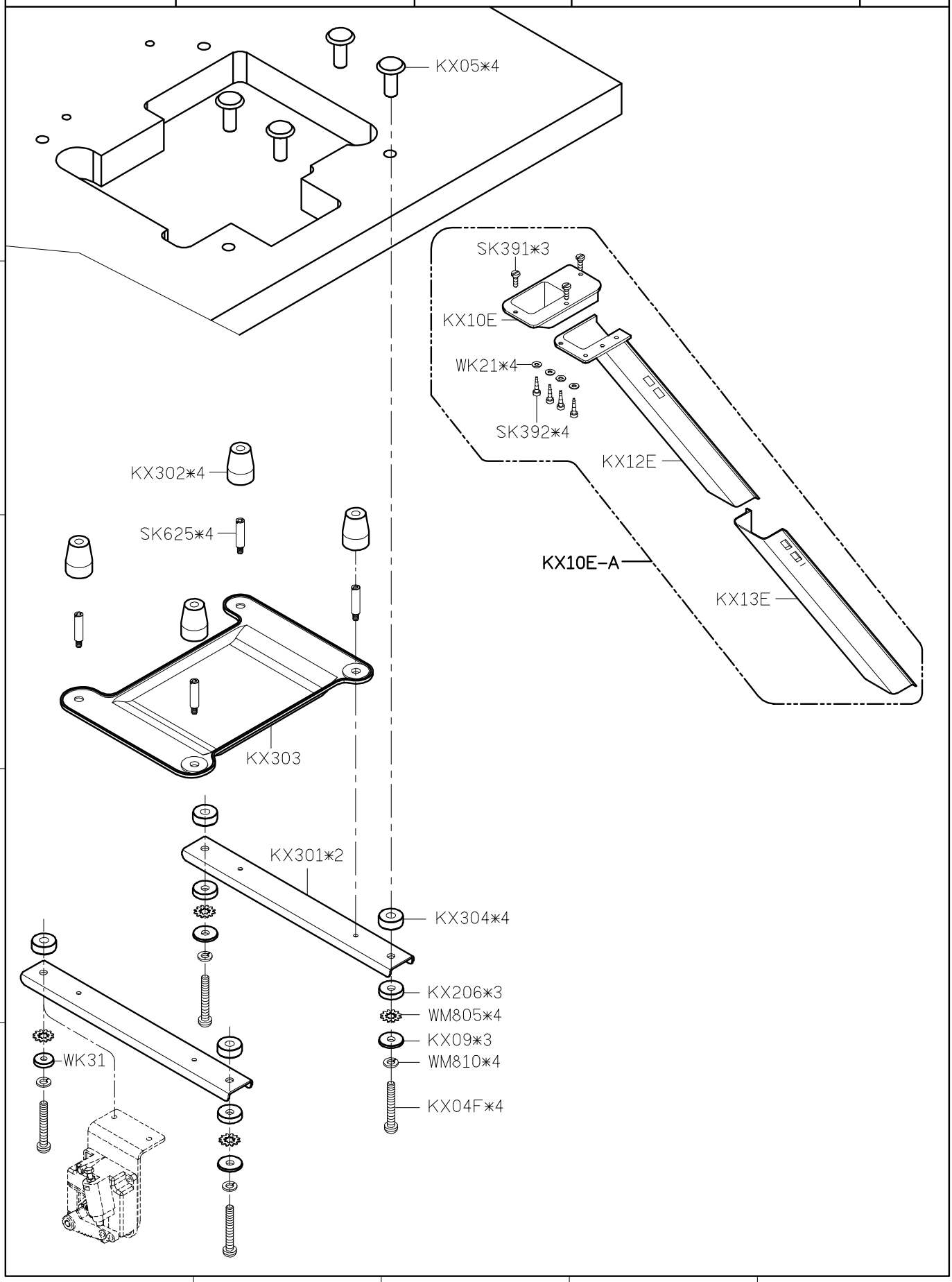

SiRUBA PARTS LIST	Series	Parts Group	Subclass / Remark	Page
	700Q/988Q	KY		1/1
				Date
				2012/08/30

KY01-1
防塵罩

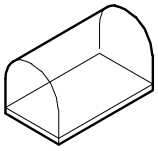

KY02F-A
油罐

KY03
油壺

KY04
漏斗

KY14
內六角螺絲起子

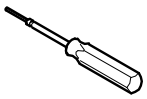

KY23-A

KY23
內六角板手

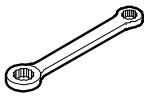

KY09
開口板手

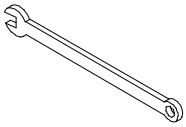

LY33
一字起子

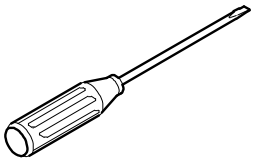

KY18
鑷子

SK216
螺絲

KY20D-A
腳踏板

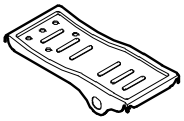

KY21-A/MY21-A
鉤子／鍊條

KY201
工具袋

KY30
針板紙

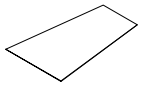

KR35
下刀片

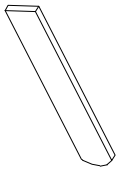

KT14-A
濾油器

KZ03
乾燥劑

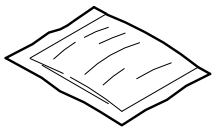

針*5
車針

KZ310
光碟片

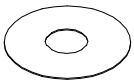

LY35
一字起子

BS508-A
固定架

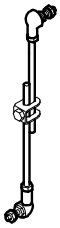

CS101-A1
控速器

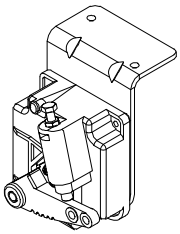

KY05-A
油壺

SIRUBA PARTS LIST	Series	Parts Group	Subclass / Remark	Page
	700Q/988Q	KZ		1/1
				Date
				2012/08/30

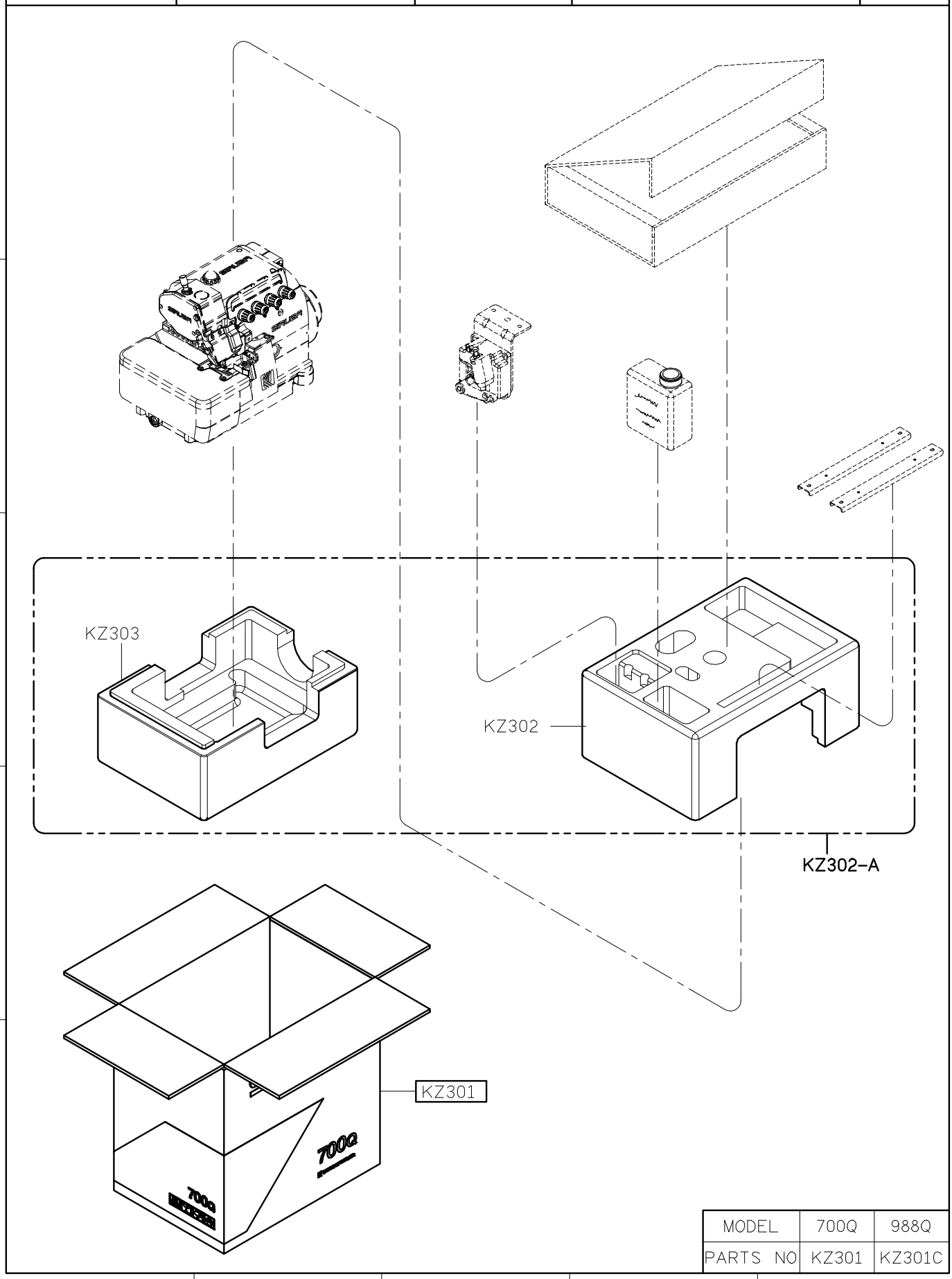

MODEL	700Q	988Q
PARTS NO	KZ301	KZ301C

1 2 3 4 5

SIRUBA PARTS LIST	Series	Parts Group	Subclass / Remark	Page
	700Q/988Q	BK-1Q		1/1
				Date
				2012/08/30

MODEL	#4	#5
PARTS NO		KN213
		SK250N

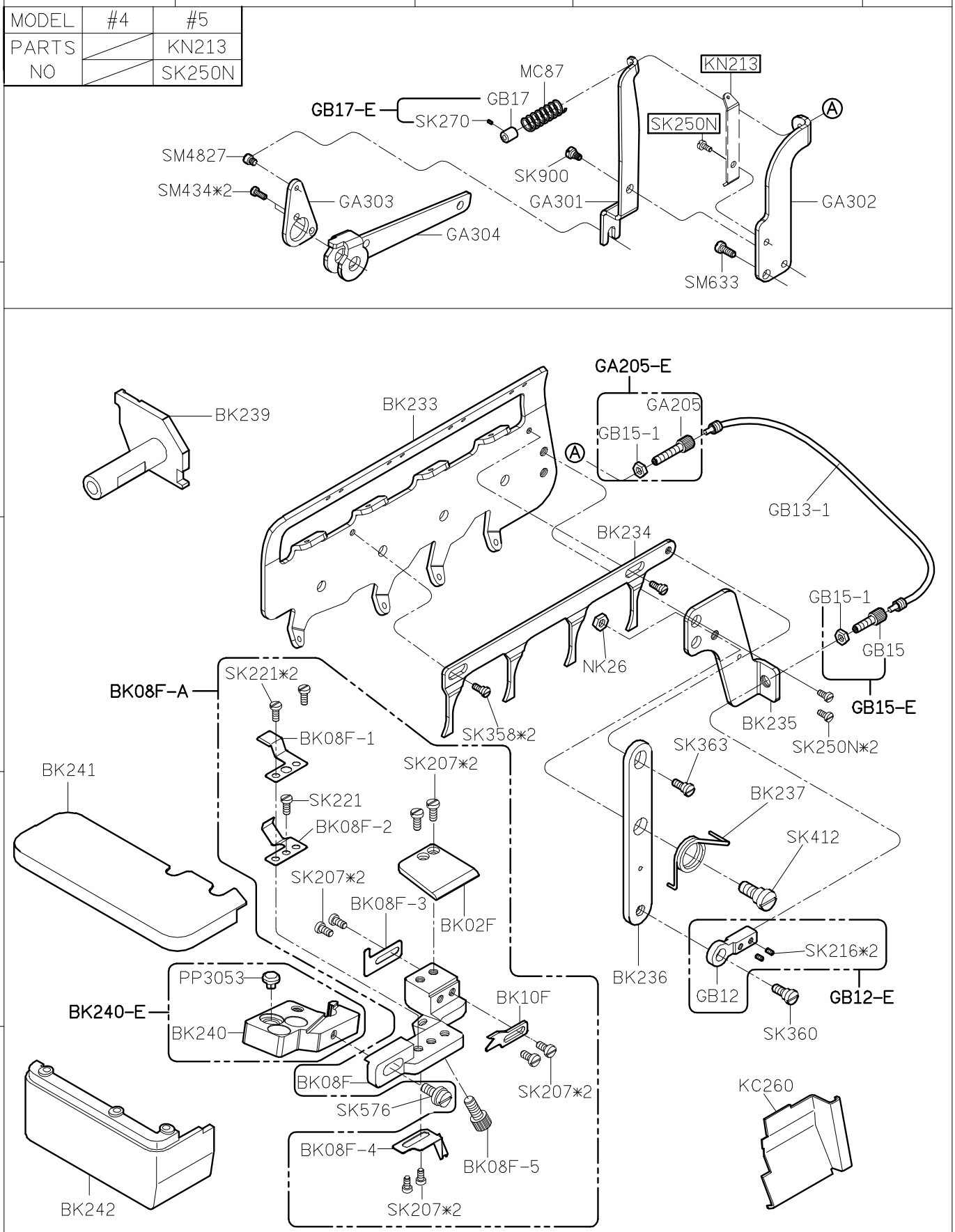

SIRUBA PARTS LIST	Series	Parts Group	Subclass / Remark	Page
	700Q/988Q	BK-Q		1/1
				Date
				2012/08/30

MODEL	#4	#5
PARTS NO		KN213
		SK250N

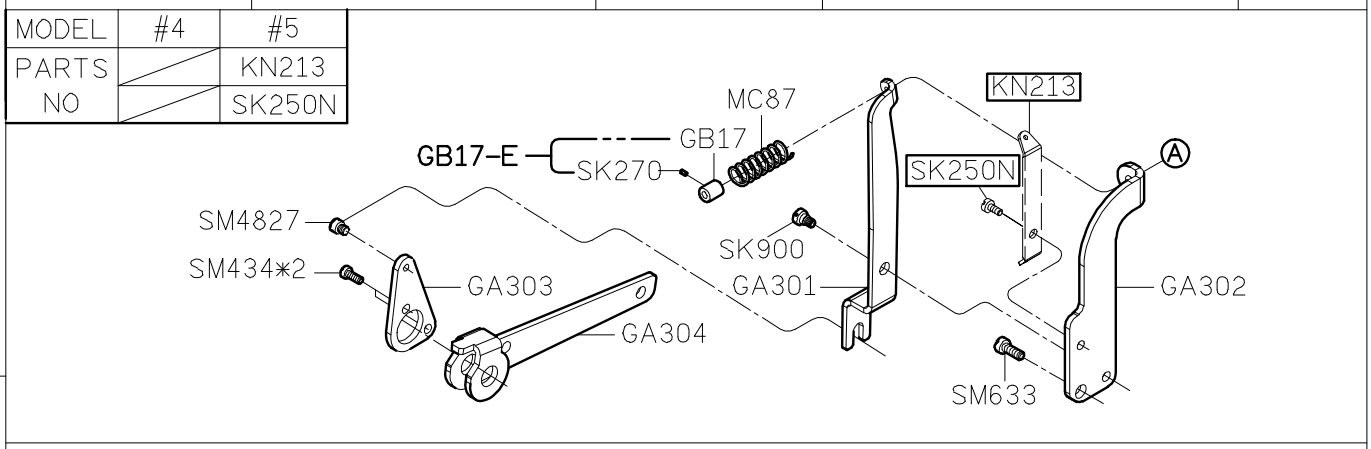

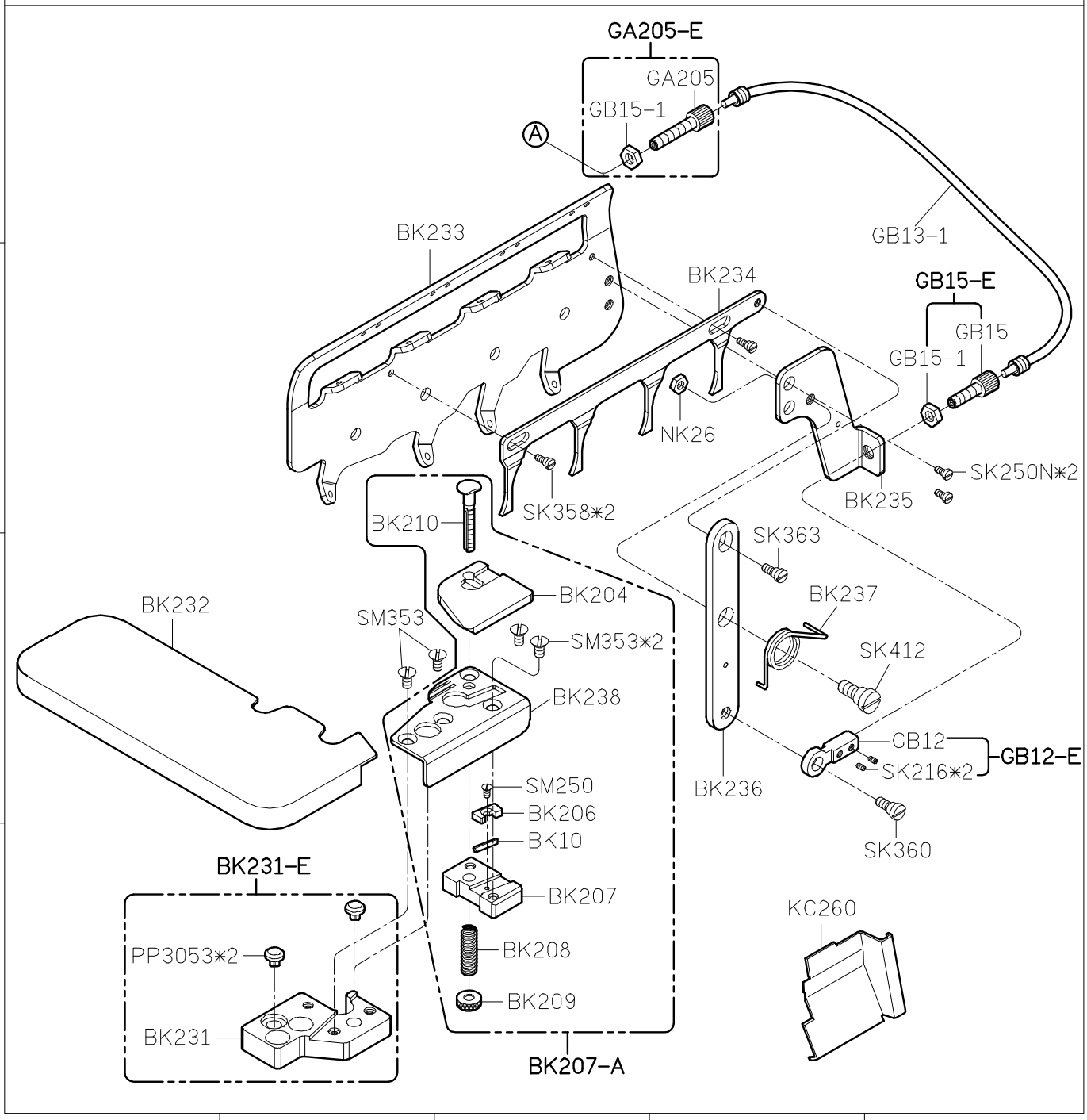

SiRUBA PARTS LIST	Series	Parts Group	Subclass / Remark	Page
	700Q/988Q	BKS		1/2
				Date
				2012/08/30

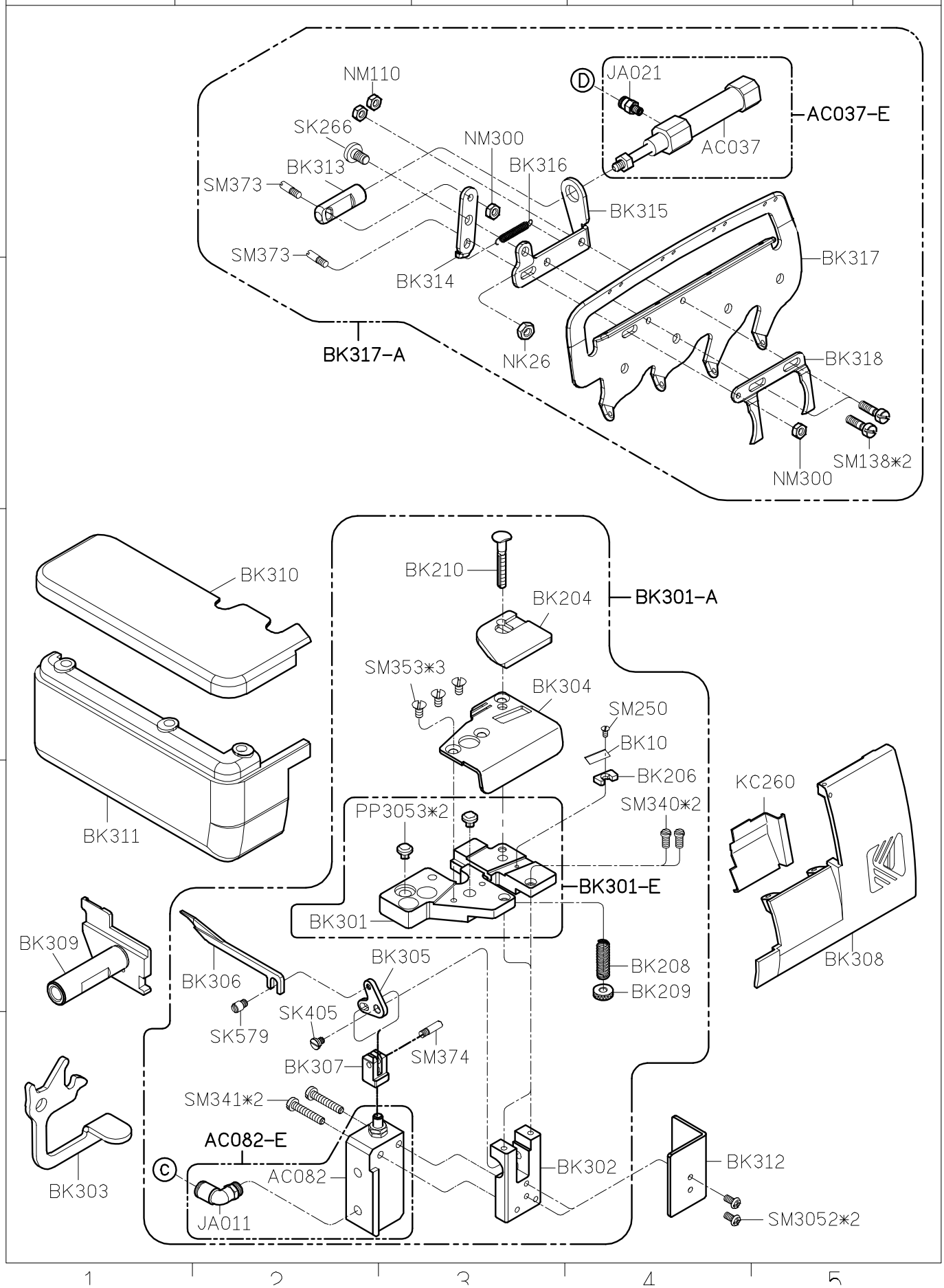

SiRUBA PARTS LIST	Series	Parts Group	Subclass / Remark	Page
	700Q/988Q	BKS		2/2
				Date
				2012/08/30

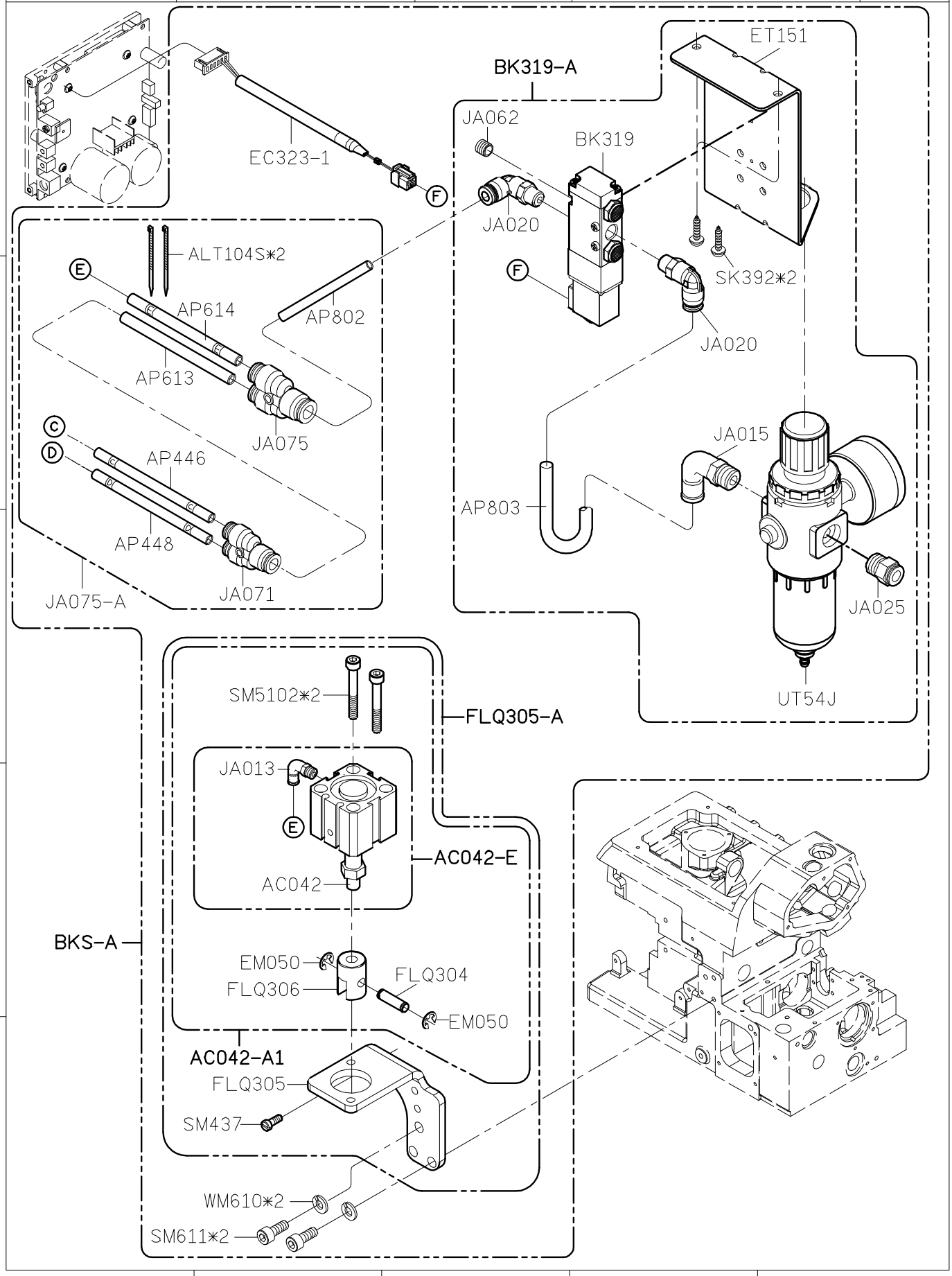

SIRUBA PARTS LIST	Series	Parts Group	Subclass / Remark	Page
	700Q/988Q	CTE		1/3
				Date
				2012/11/05

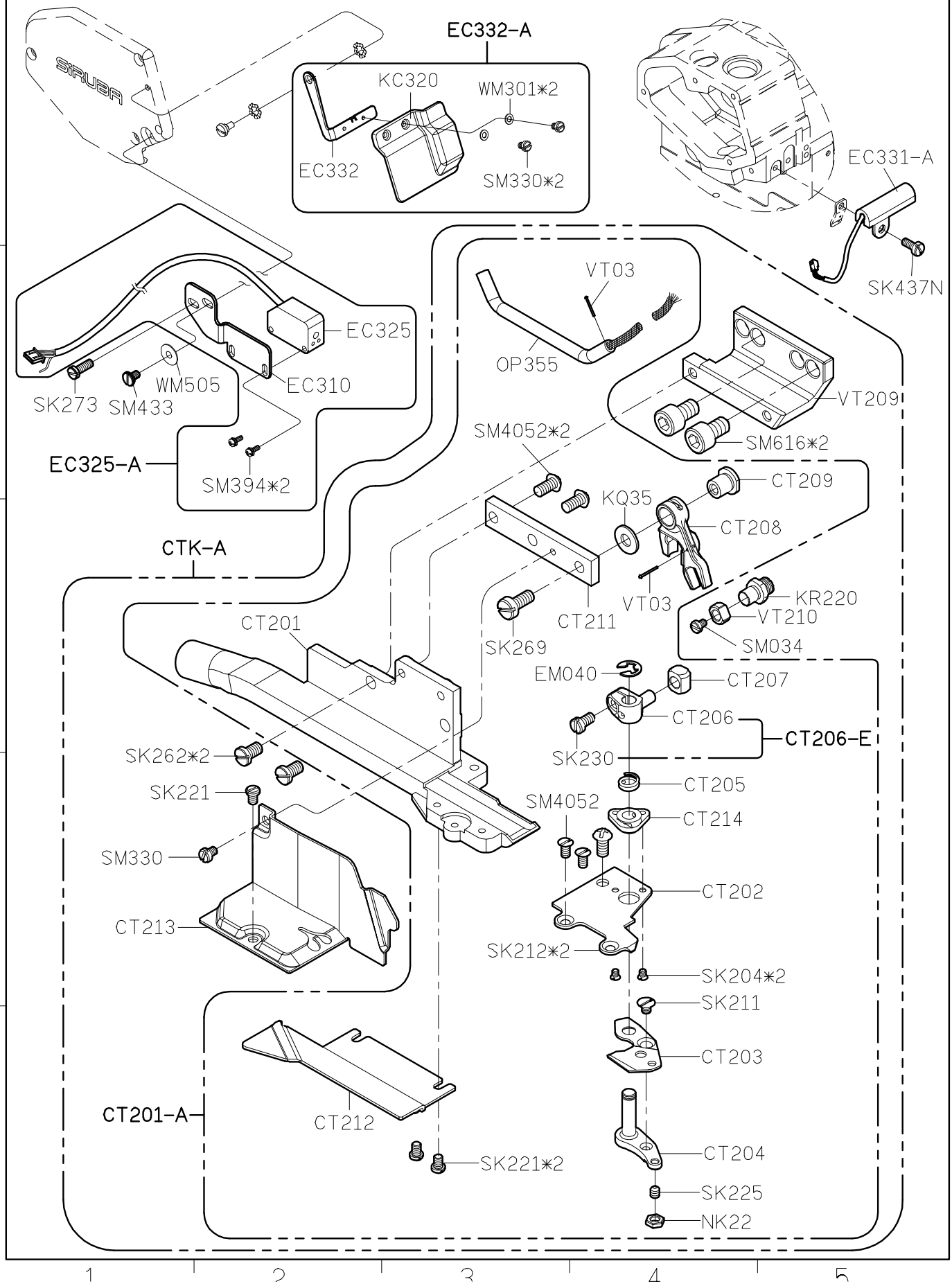

SIRUBA PARTS LIST	Series	Parts Group	Subclass / Remark	Page
	700Q/988Q	CTE		2/3
				Date
				2012/08/30

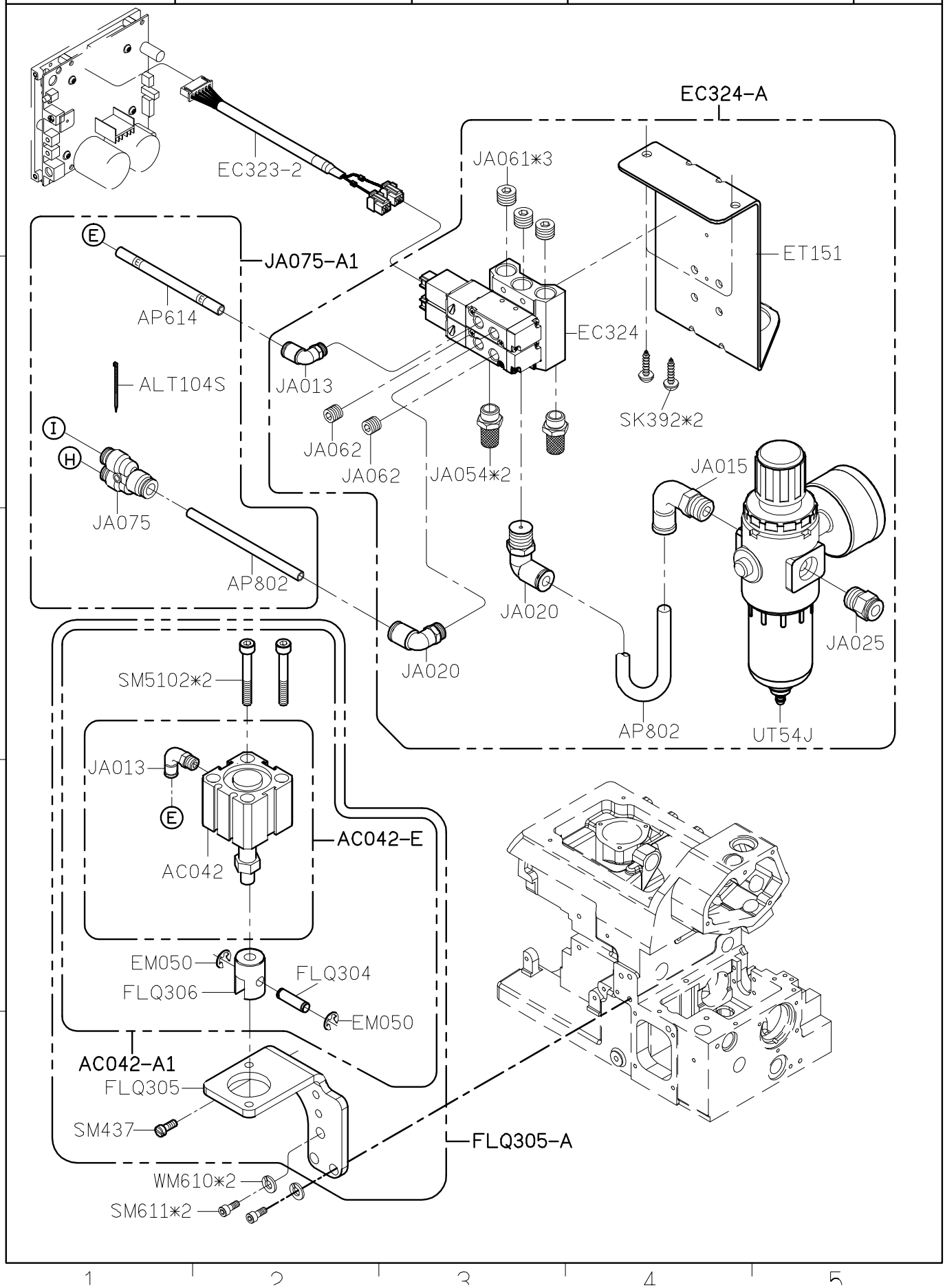

SIRUBA PARTS LIST	Series	Parts Group	Subclass / Remark	Page
	700Q/988Q	CTE		3/3
				Date
				2012/10/04

TUA-35

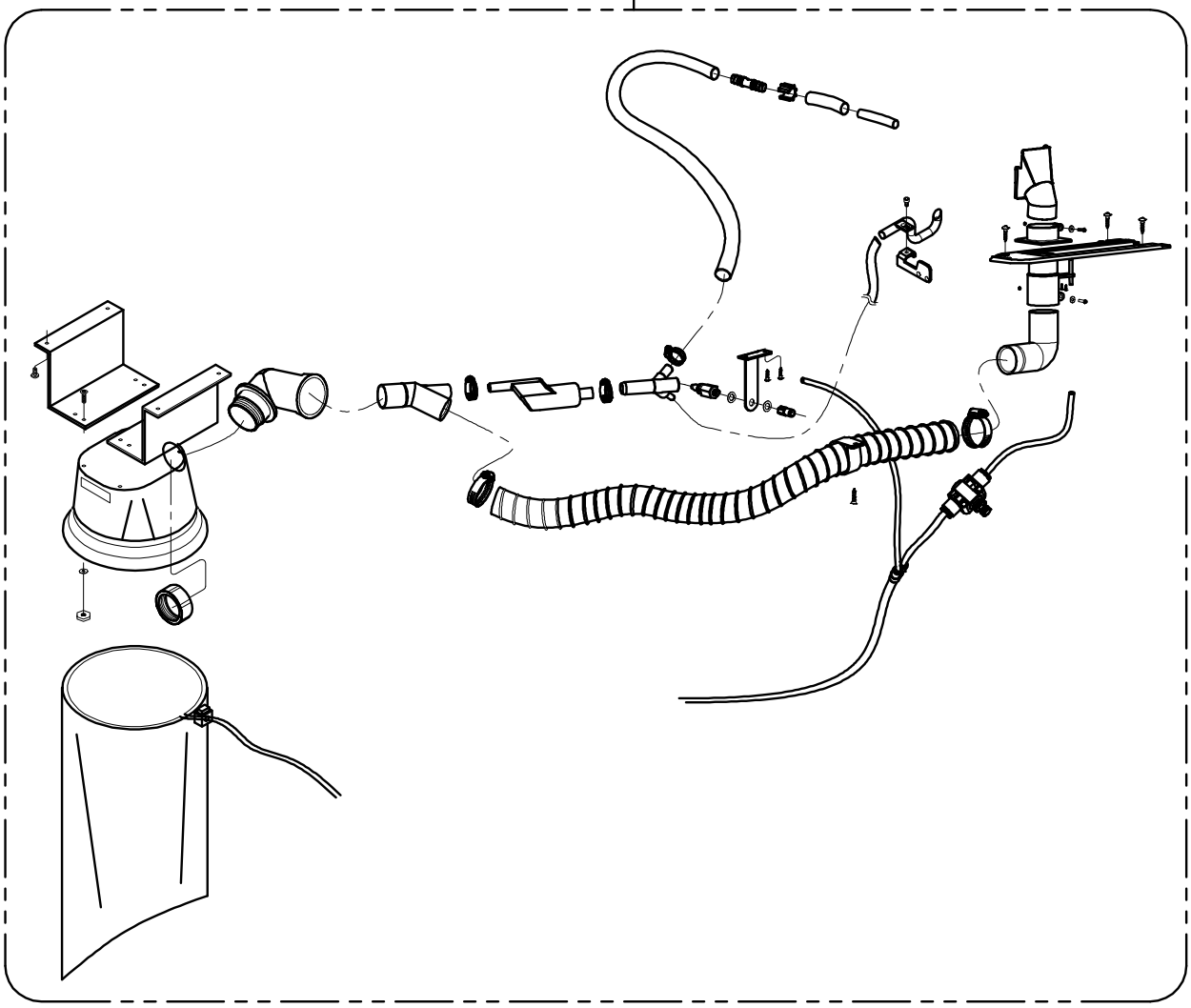

SIRUBA PARTS LIST	Series	Parts Group	Subclass / Remark	Page
	700Q/988Q	CT-K		1/1
				Date
				2012/10/04

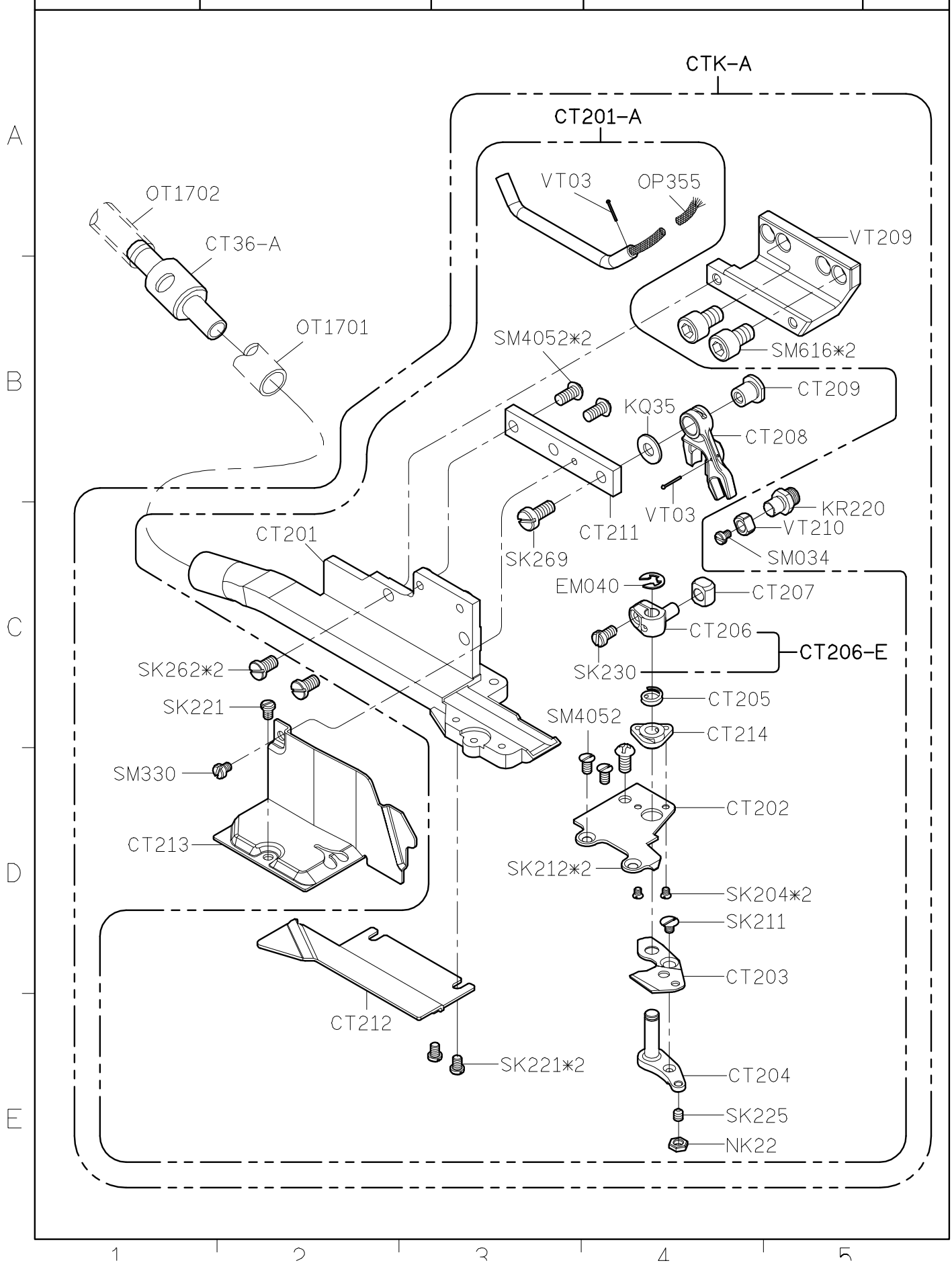

SIRUBA PARTS LIST	Series	Parts Group	Subclass / Remark	Page
	700Q/988Q	ECA		1/3
				Date
				2012/08/30

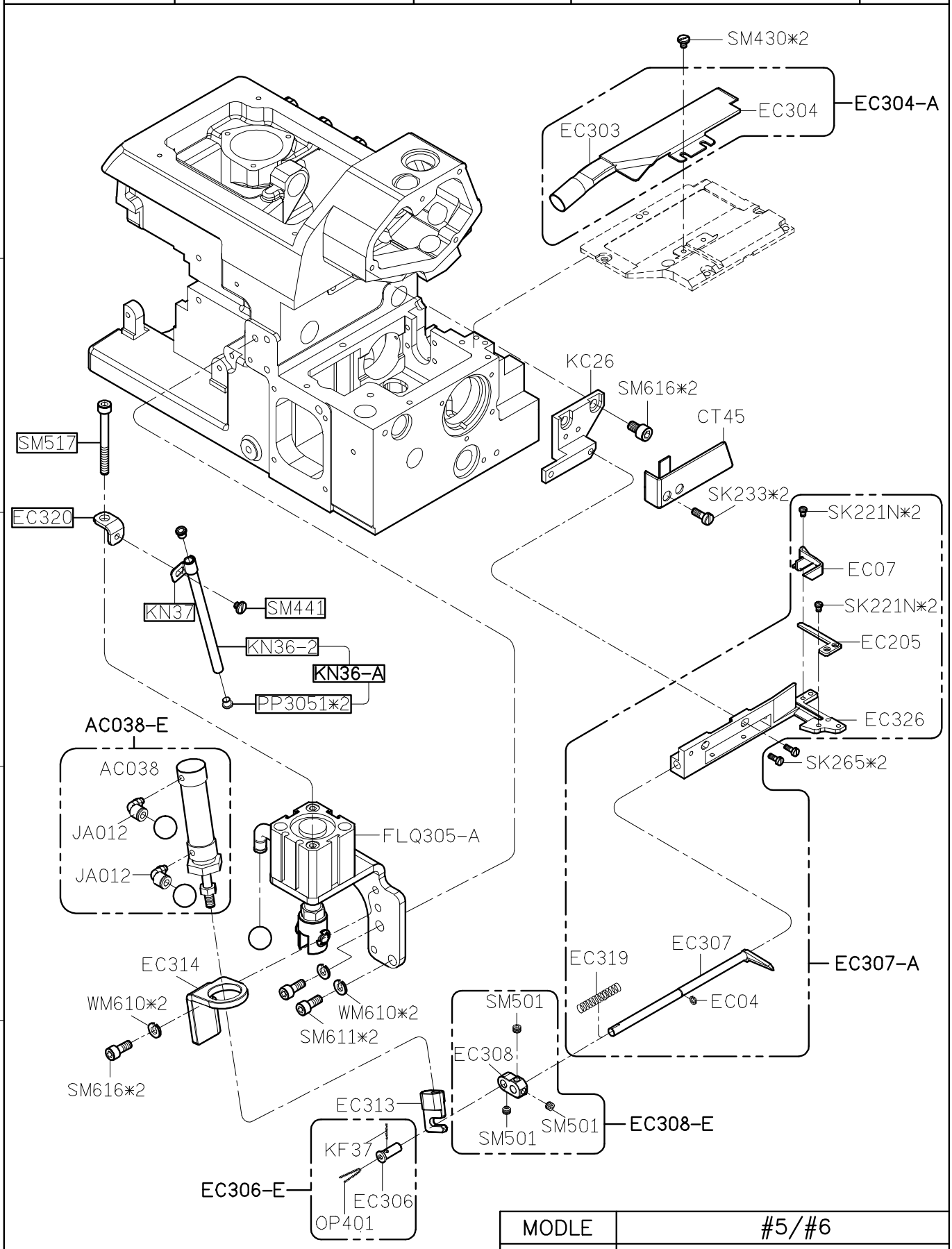

MODLE	#5/#6
PARTS NO	EC320,KN36-A,KN37,SM441,SM517

SIRUBA PARTS LIST	Series	Parts Group	Subclass / Remark	Page
	700Q/988Q	ECA		2/3
				Date
				2012/11/14

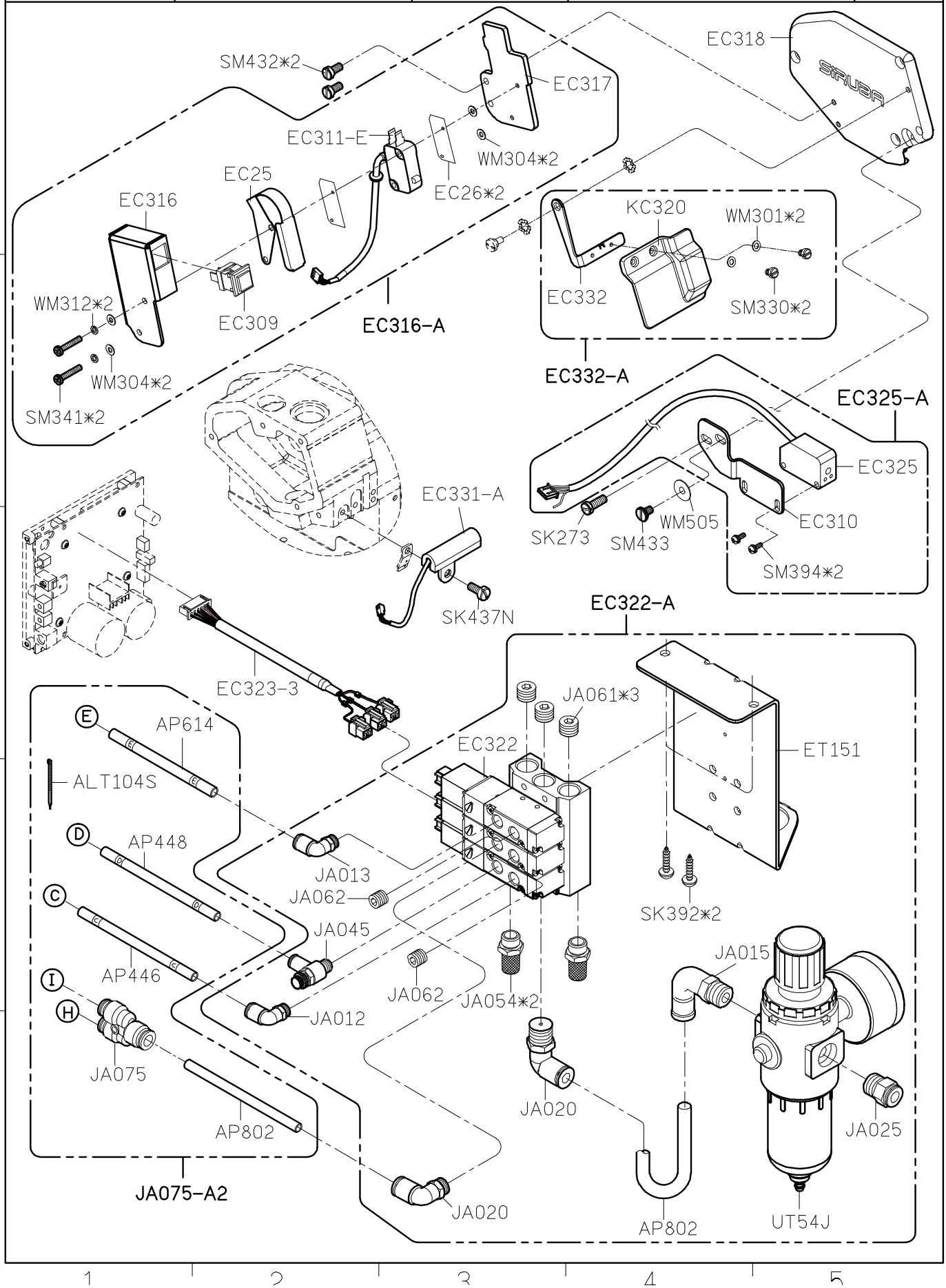

SIRUBA PARTS LIST	Series	Parts Group	Subclass / Remark	Page
	700Q/988Q	ECA		3/3
				Date
				2012/10/04

TUA-35

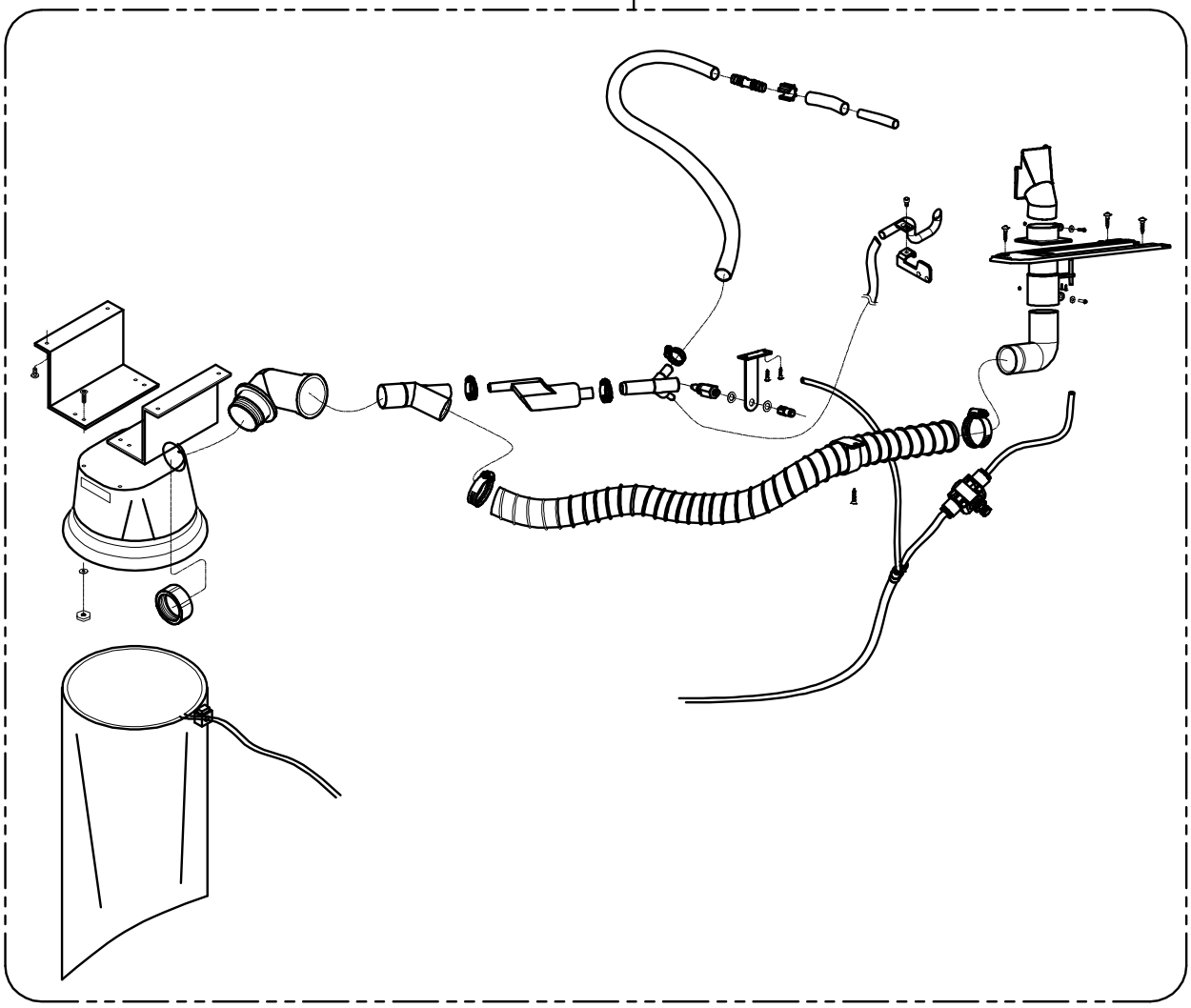

SIRUBA PARTS LIST	Series	Parts Group	Subclass / Remark	Page
	700Q/988Q	ECB		1/3
				Date
				2012/08/30

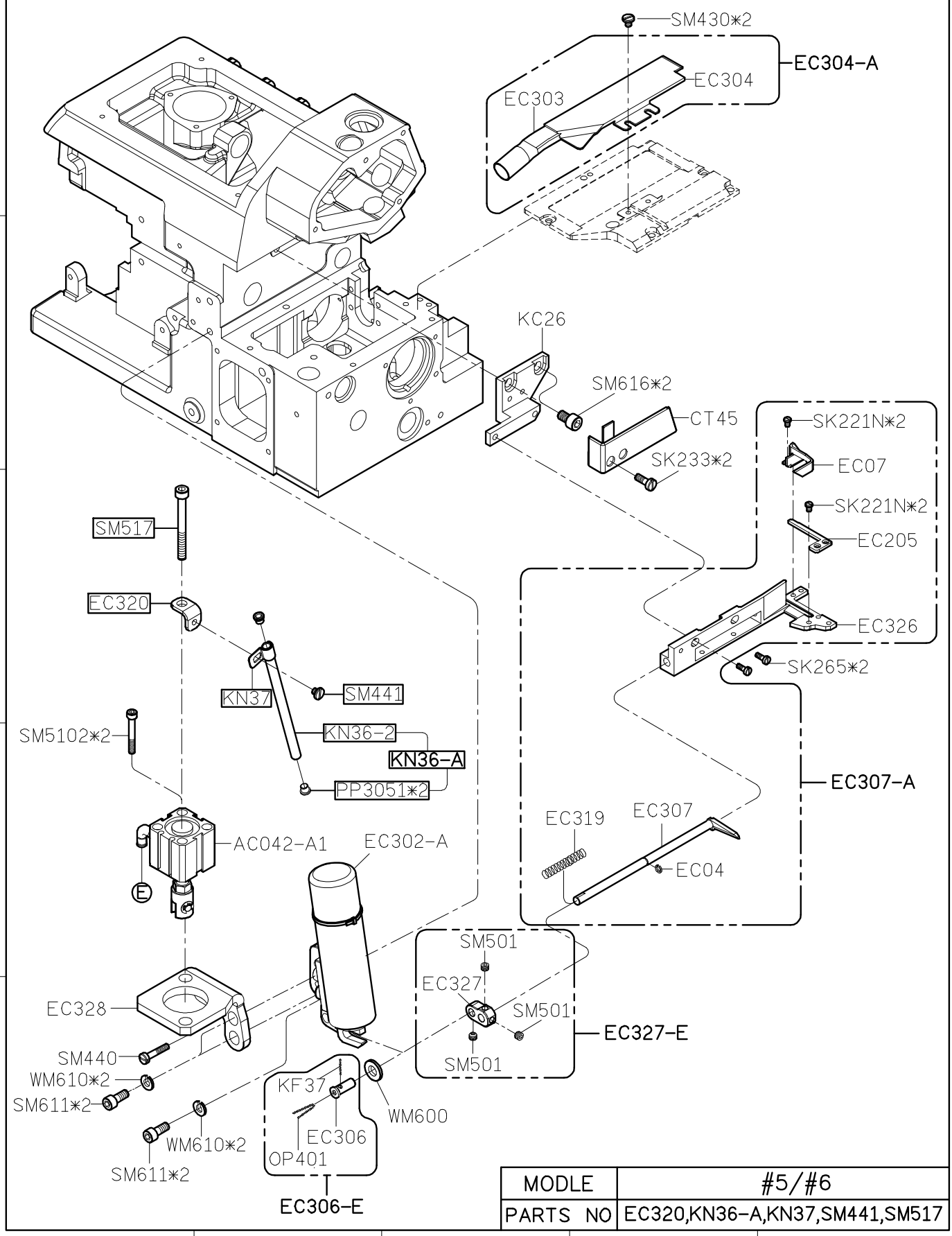

MODLE	#5/#6
PARTS NO	EC320,KN36-A,KN37,SM441,SM517

SIRUBA PARTS LIST	Series	Parts Group	Subclass / Remark	Page
	700Q/988Q	ECB		2/3
				Date
				2012/11/14

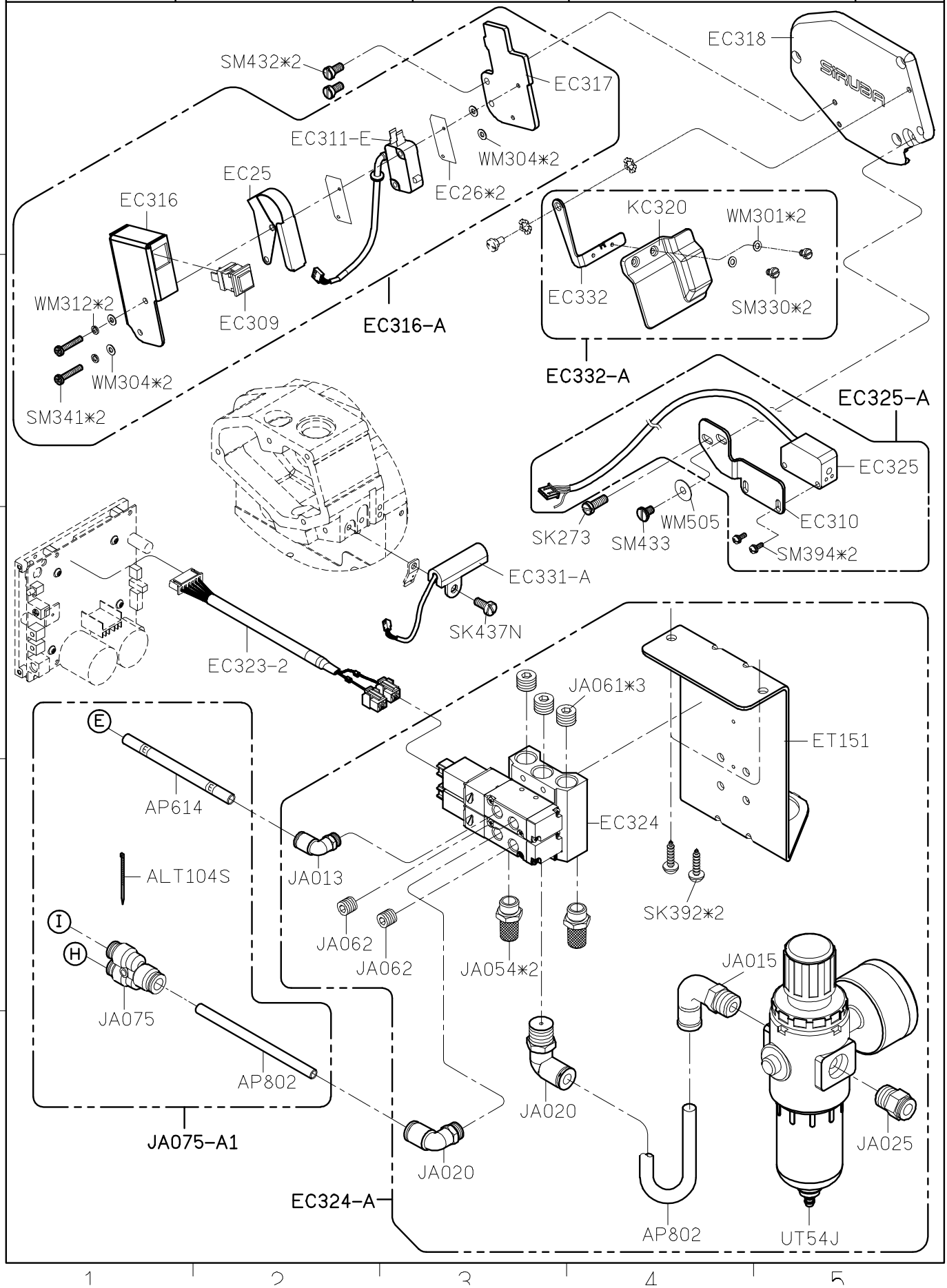

SiRUBA PARTS LIST	Series	Parts Group	Subclass / Remark	Page
	700Q/988Q	ECB		3/3
				Date
				2012/10/04

TUA-35

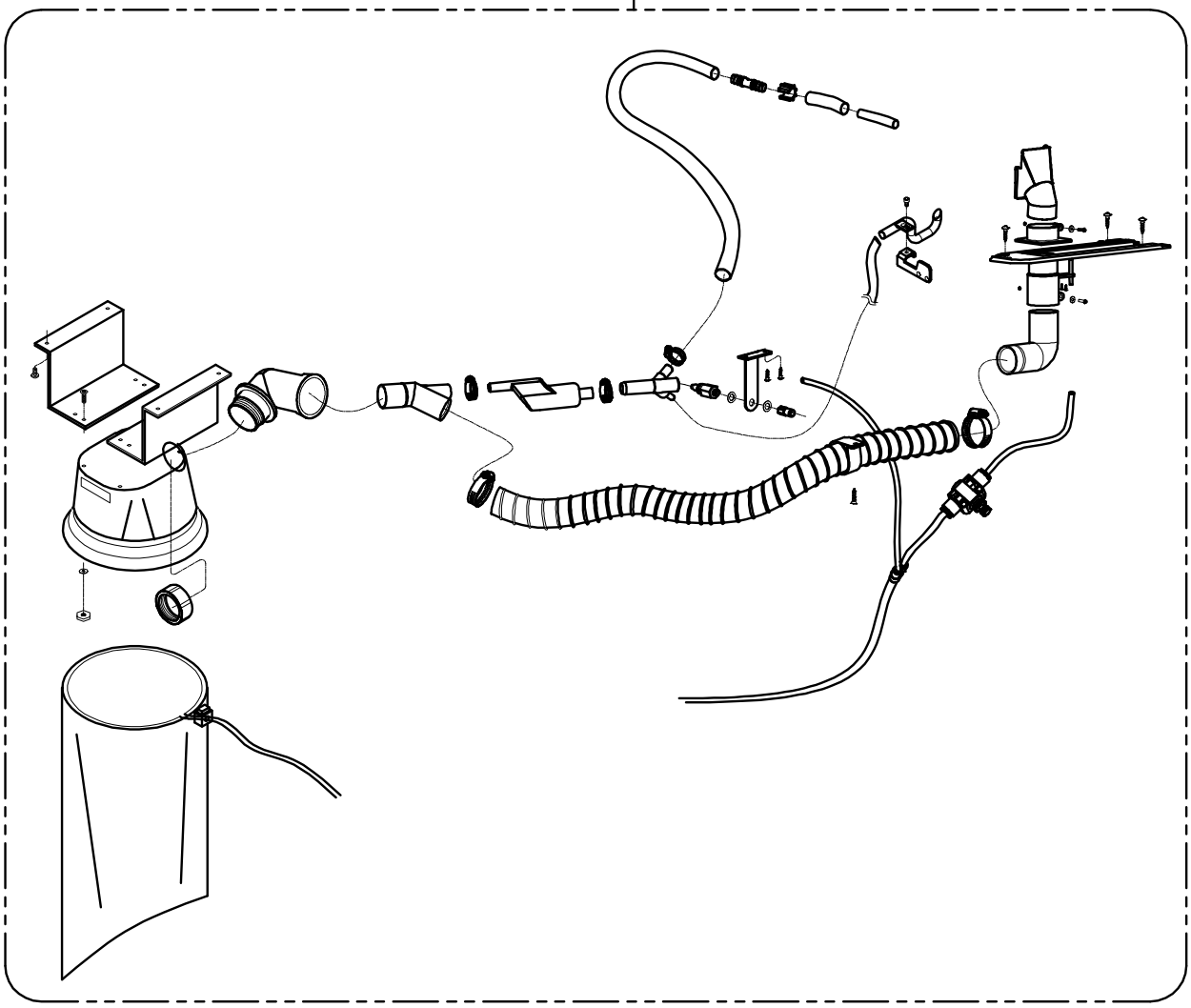

SIRUBA PARTS LIST	Series	Parts Group	Subclass Remark	Page
	700Q/988Q	FLQ		1/1
				Date
				2012/08/23

FLQ−1B

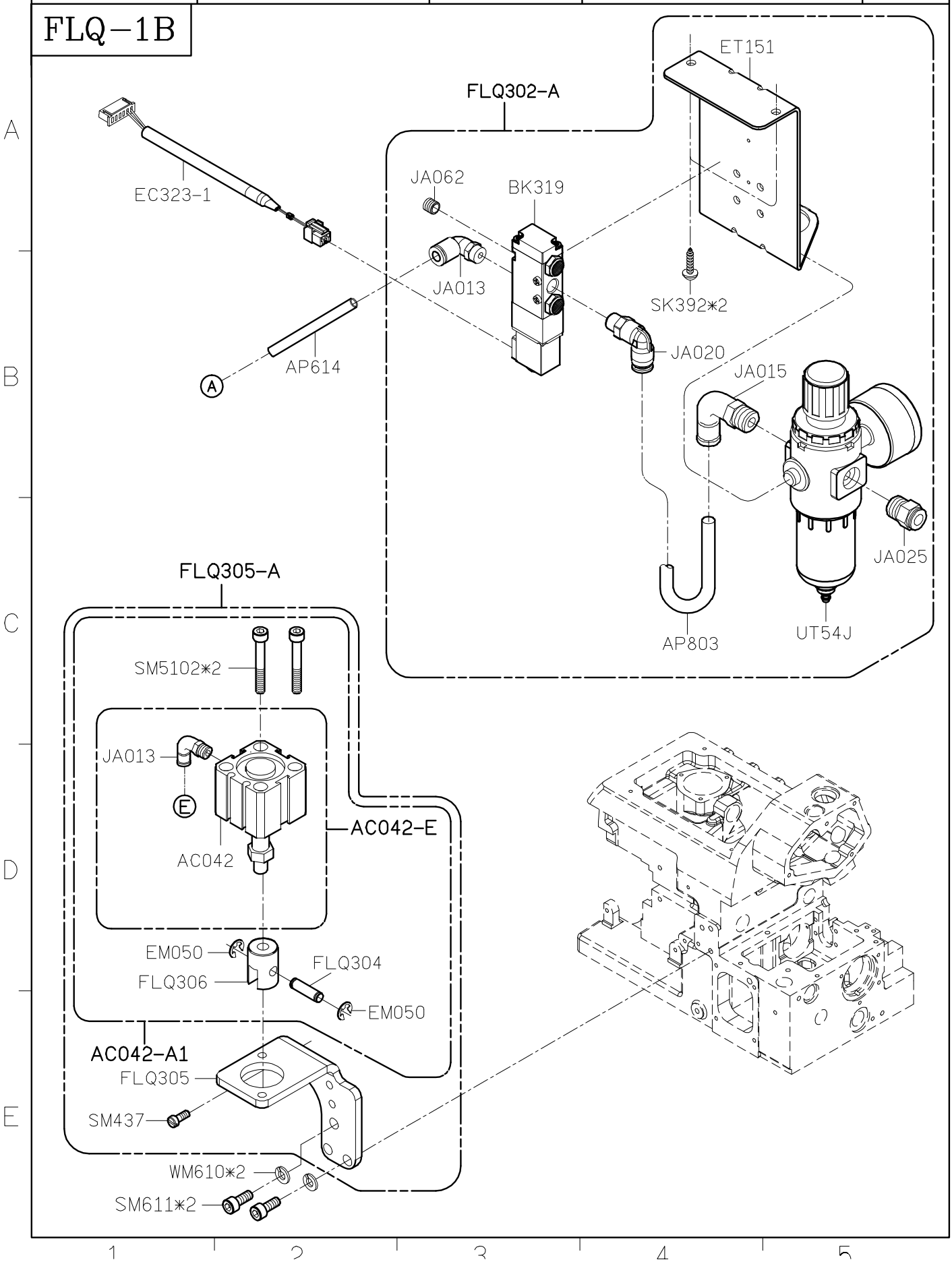

SIRUBA PARTS LIST	Series	Parts Group	Subclass / Remark	Page
	700Q/988Q	GAL-Q		1/1
				Date
				2012/10/29

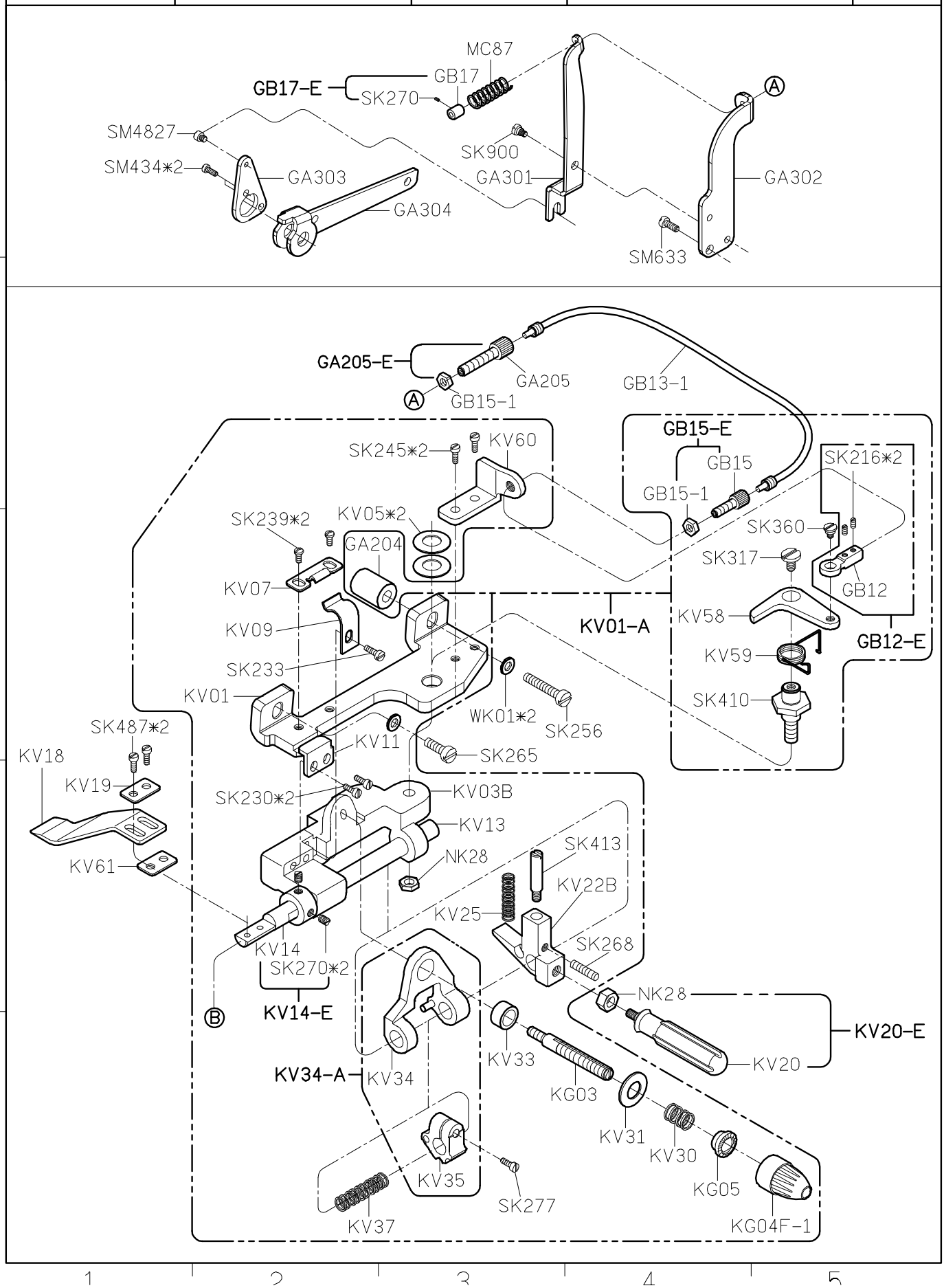

SIRUBA PARTS LIST	Series	Parts Group	Subclass / Remark	Page
	700Q/988Q	GA-Q		1/1
				Date
				2012/10/29

MODEL	#4	#5
PARTS NO		KN213
		SK250N

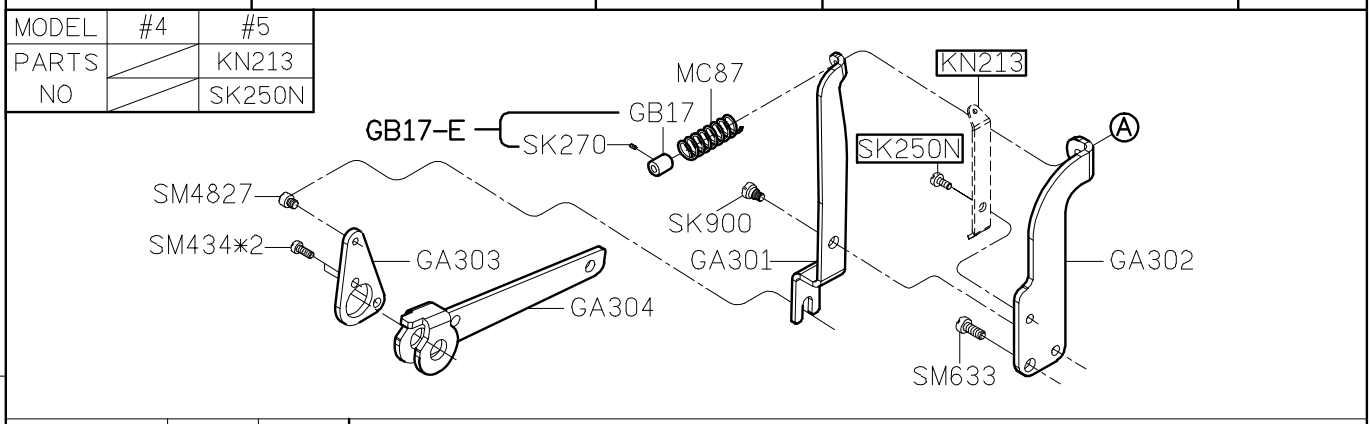

MODEL	#4	#5
PARTS NO	KV16	KV17

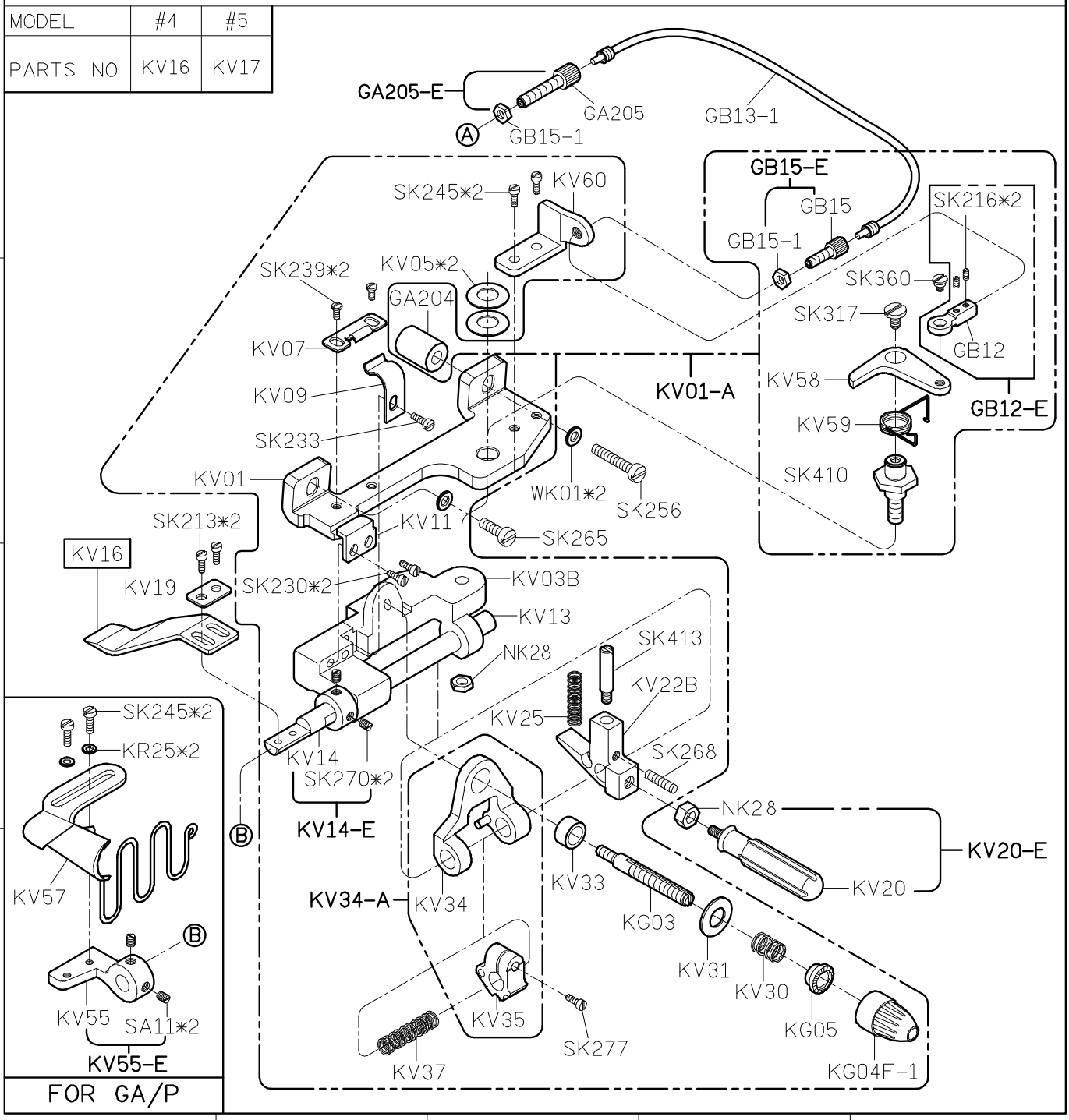

SIRUBA PARTS LIST	Series	Parts Group	Subclass / Remark	Page
	700Q/988Q	PS-Q	∗: For Device Order	1/1
				Date
				2012/08/30

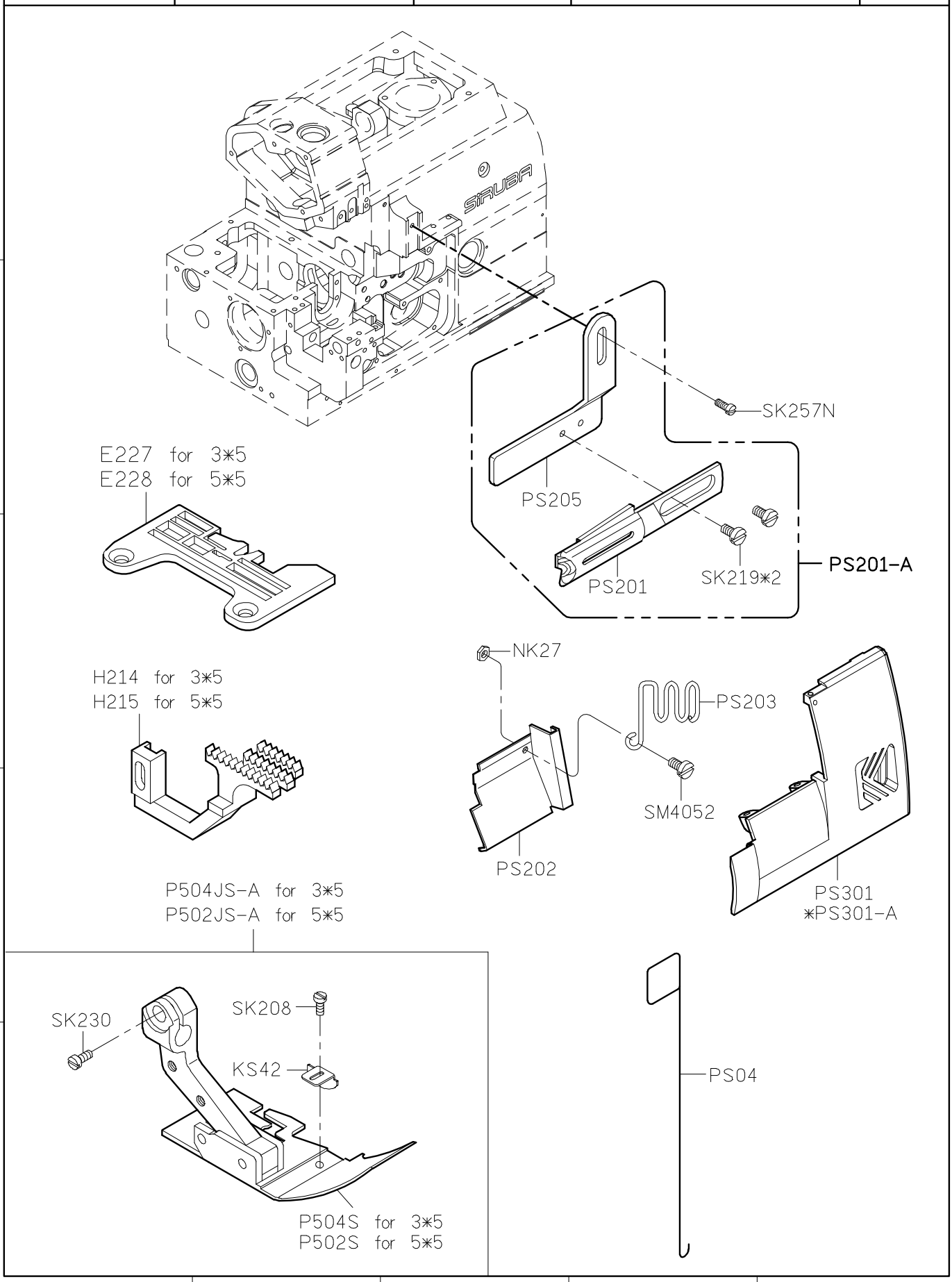

SIRUBA PARTS LIST	Series	Parts Group	Subclass / Remark	Page
	700Q/988Q	TA-Q	＊: For Device Order	1/1
				Date
				2012/08/30

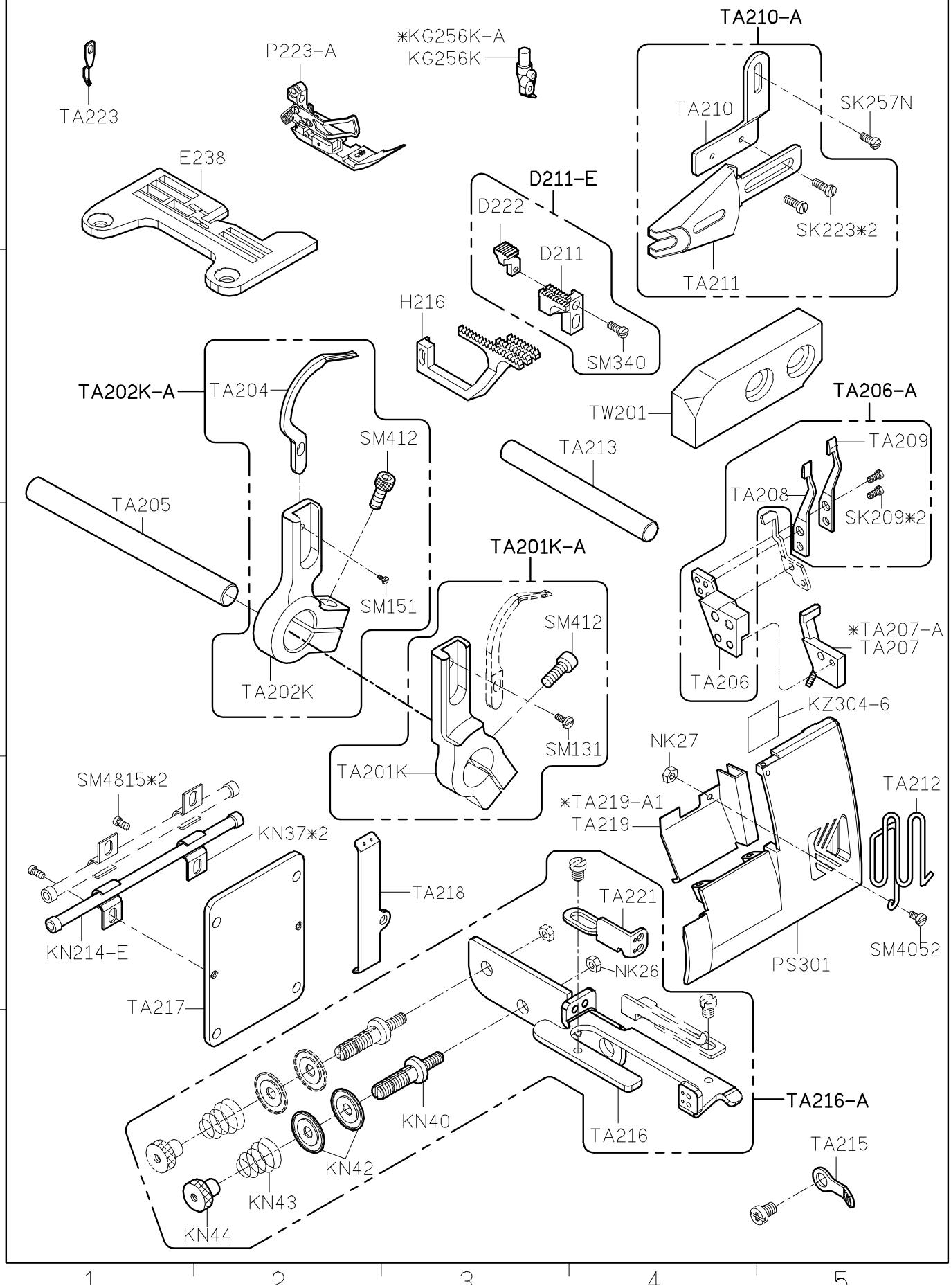

SIRUBA PARTS LIST	Series	Parts Group	Subclass / Remark	Page
	700Q/988Q	TG-Q		1/1
				Date
				2012/08/30

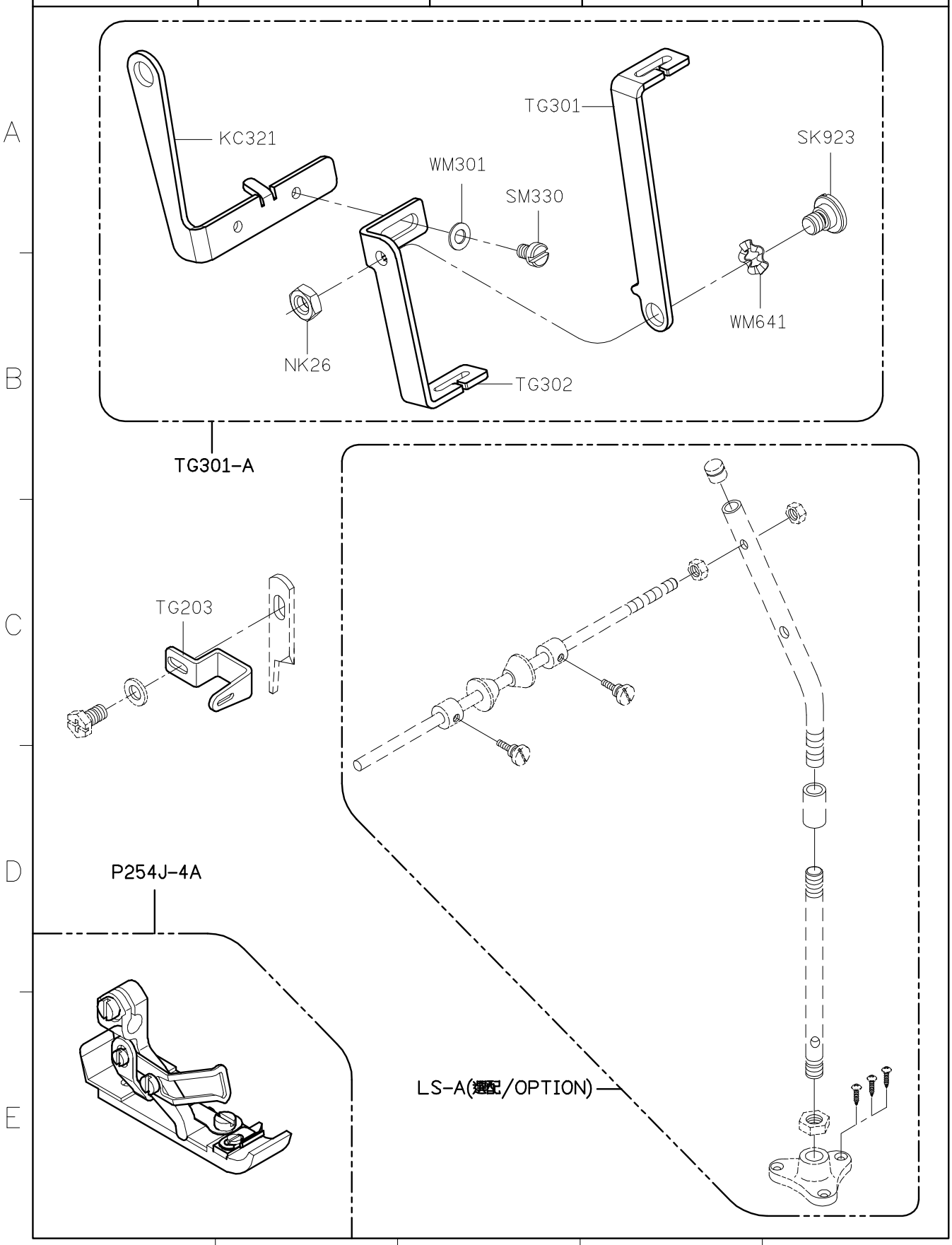

SiRUBA PARTS LIST	Series	Parts Group	Subclass / Remark	Page
	700Q/988Q	TR-Q		1/1
				Date
				2012/08/30

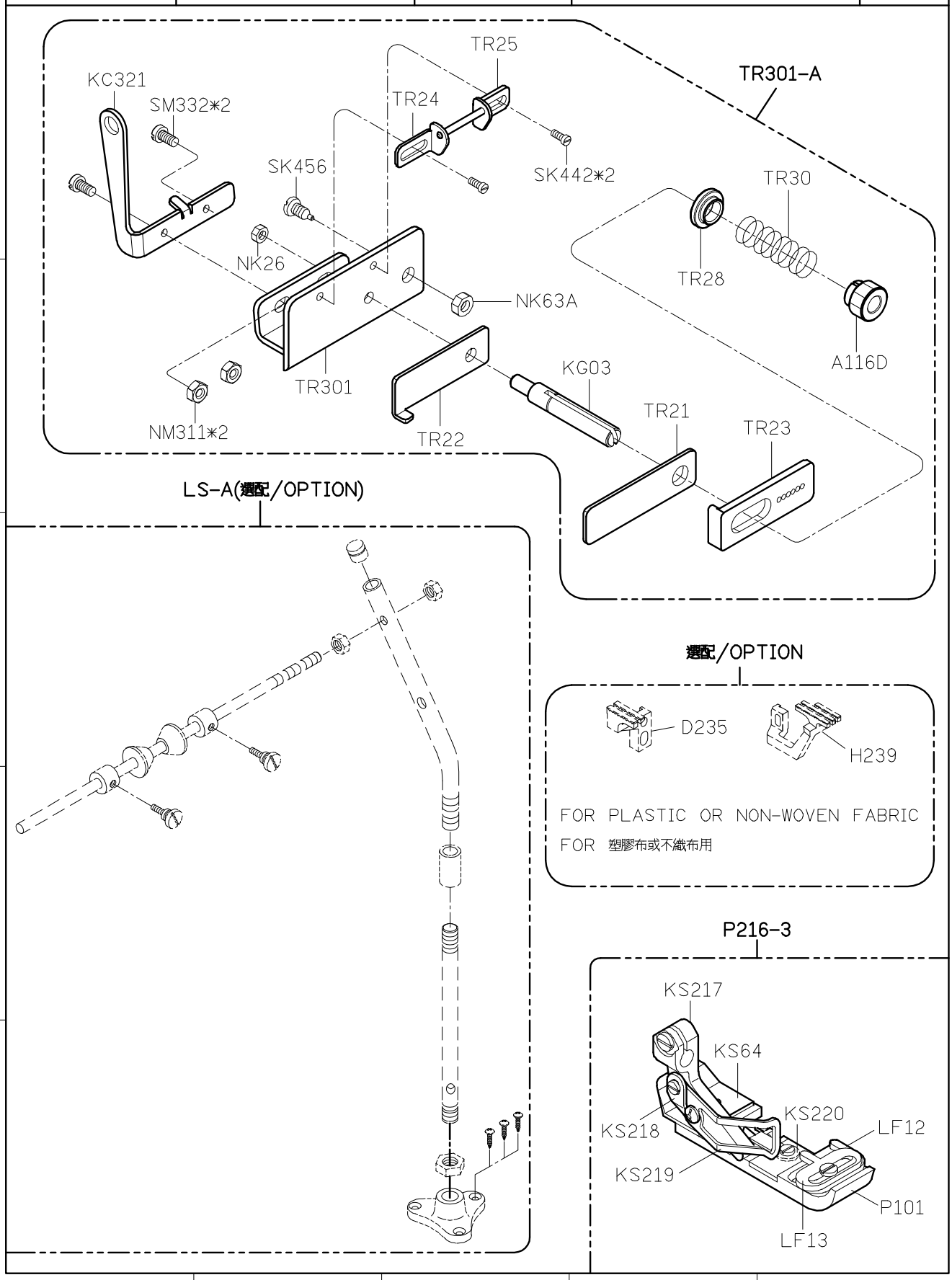

SIRUBA PARTS LIST	Series	Parts Group	Subclass / Remark	Page
	700Q/988Q	TW-K		1/1
				Date
				2012/10/04

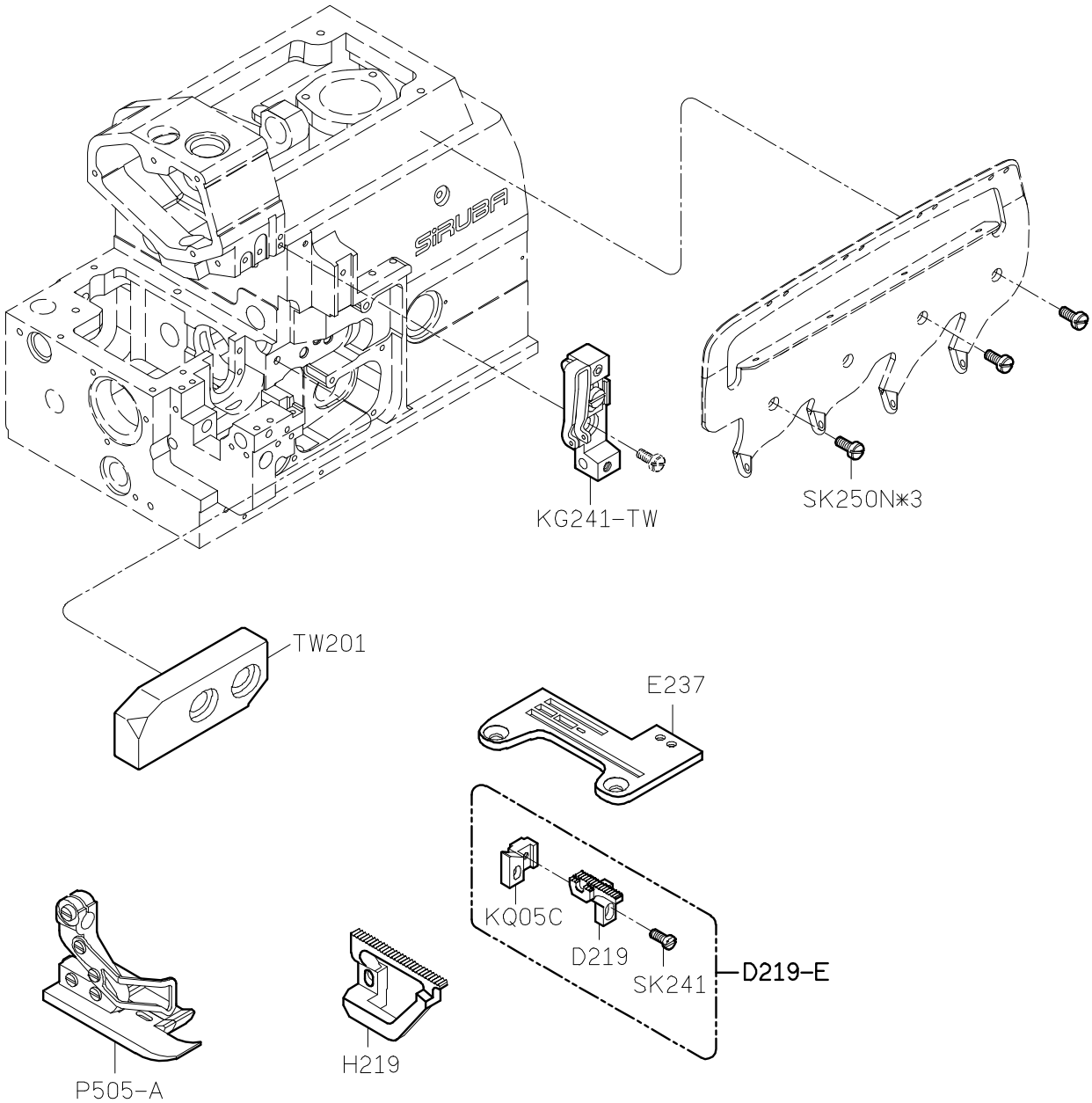

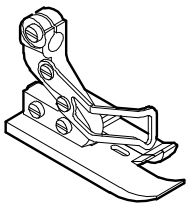

P506-A

● 客戶選購/OPTIONAL

PARTS NO	GAUGE
P506-2	5
P506-3	6

SIRUBA PARTS LIST	Series	Parts Group	Subclass / Remark	Page
	700Q/988Q	VTE		1/3
				Date
				2012/11/05

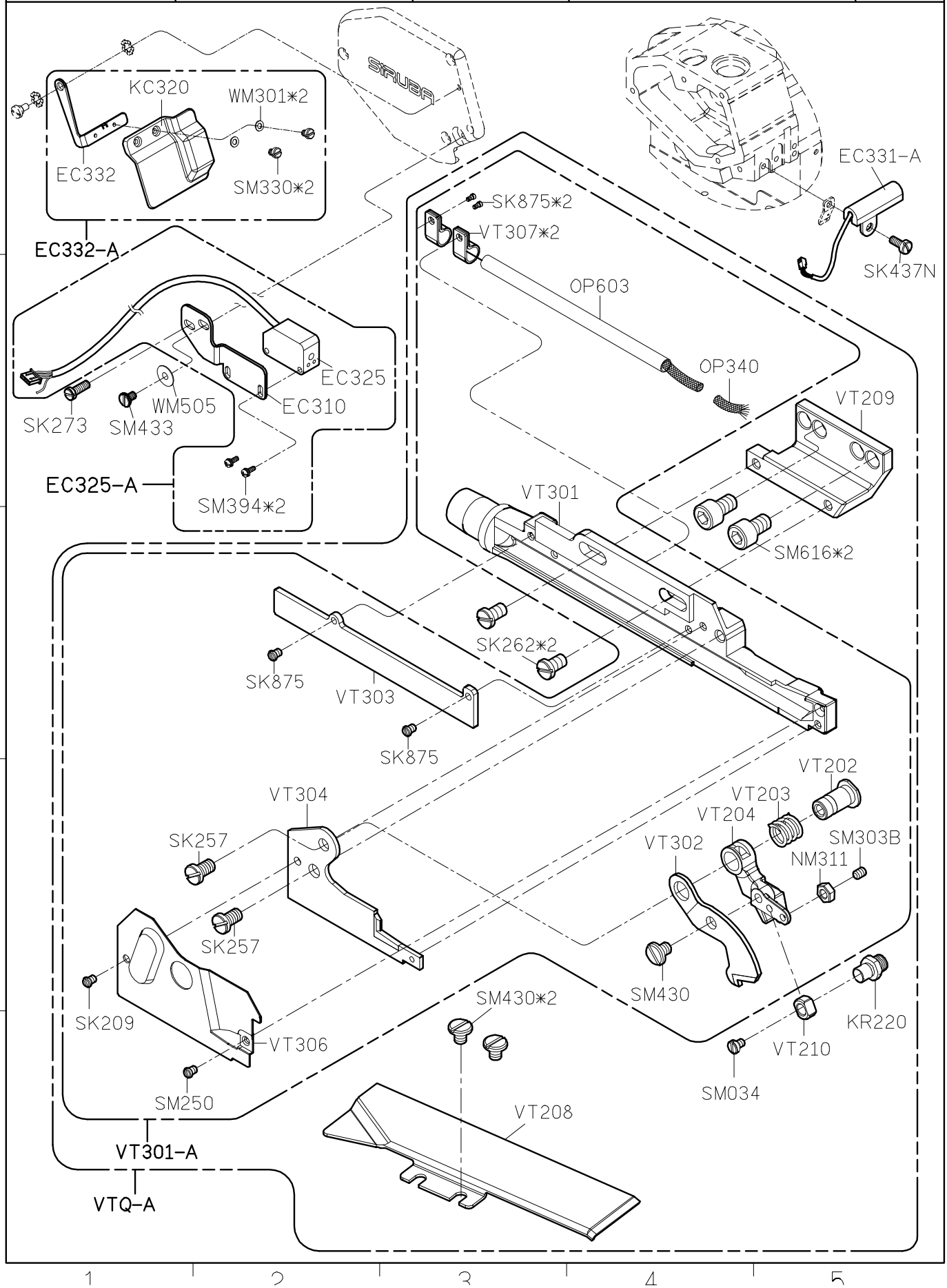

SIRUBA PARTS LIST	Series	Parts Group	Subclass / Remark	Page
	700Q/988Q	VTE		2/3
				Date
				2012/08/30

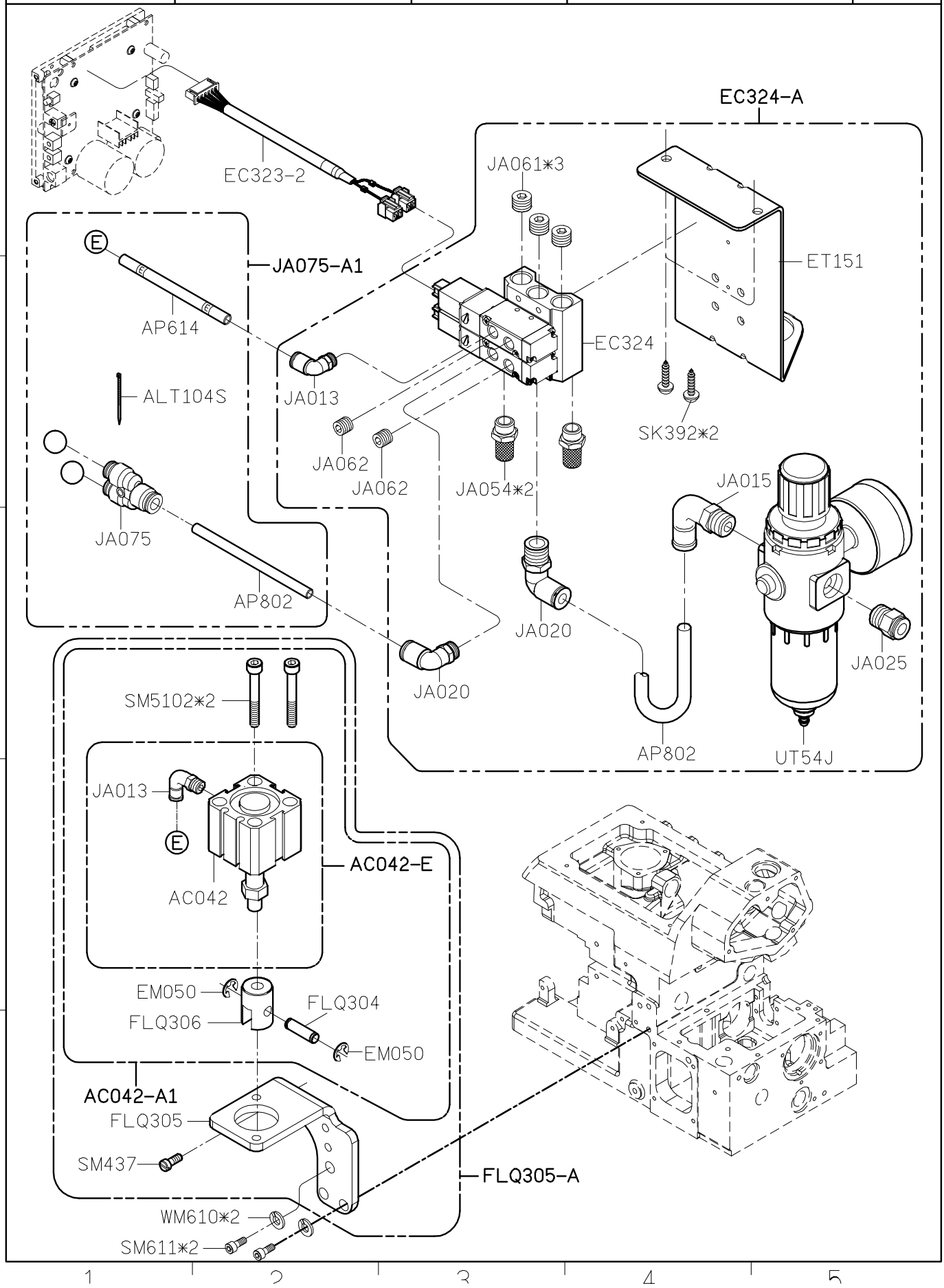

SiRUBA PARTS LIST	Series	Parts Group	Subclass / Remark	Page
	700Q/988Q	VTE		3/3
				Date
				2012/10/04

TUA-35

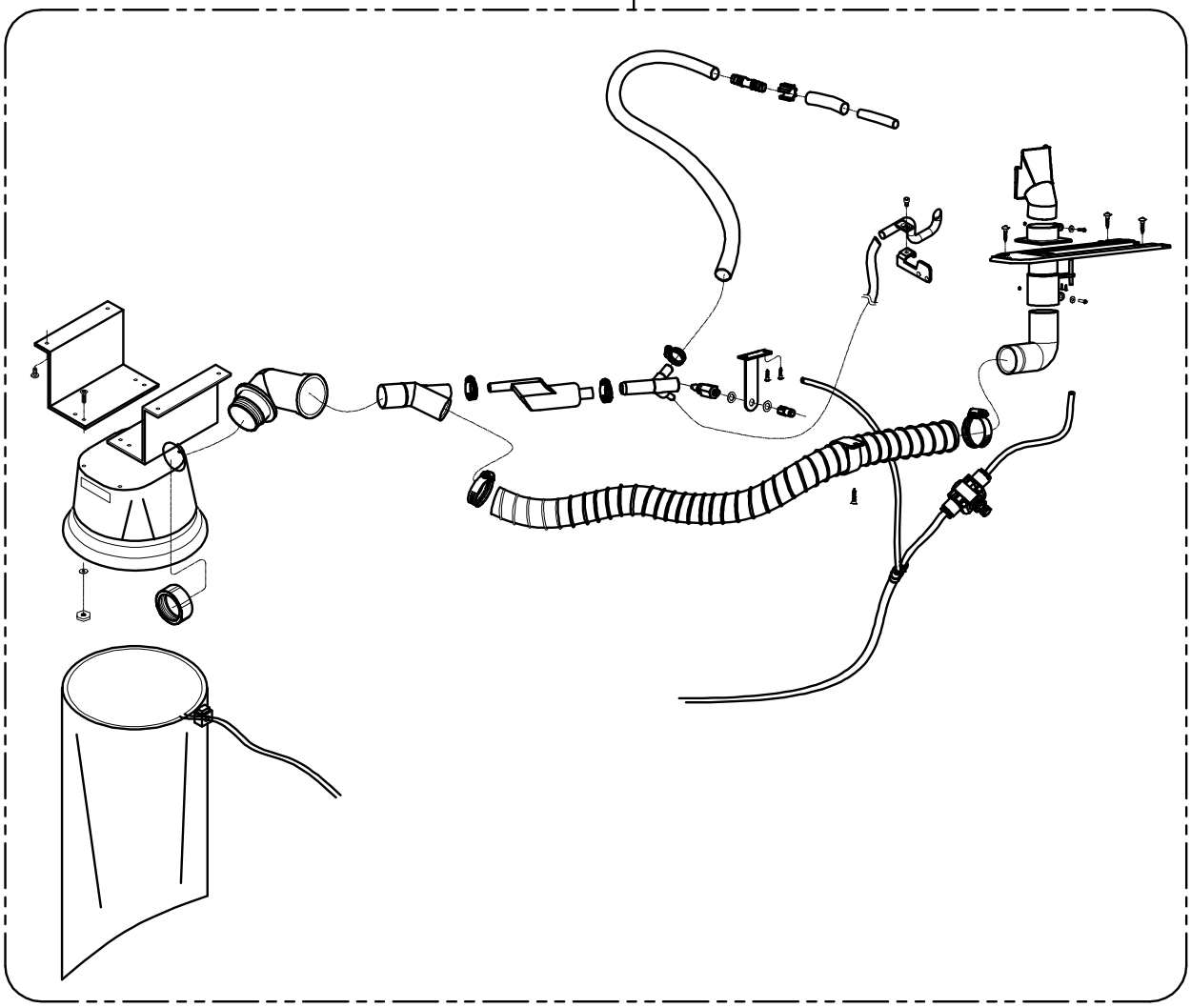

SIRUBA PARTS LIST	Series	Parts Group	Subclass / Remark	Page
	700Q/988Q	VT-Q		1/1
				Date
				2012/08/30

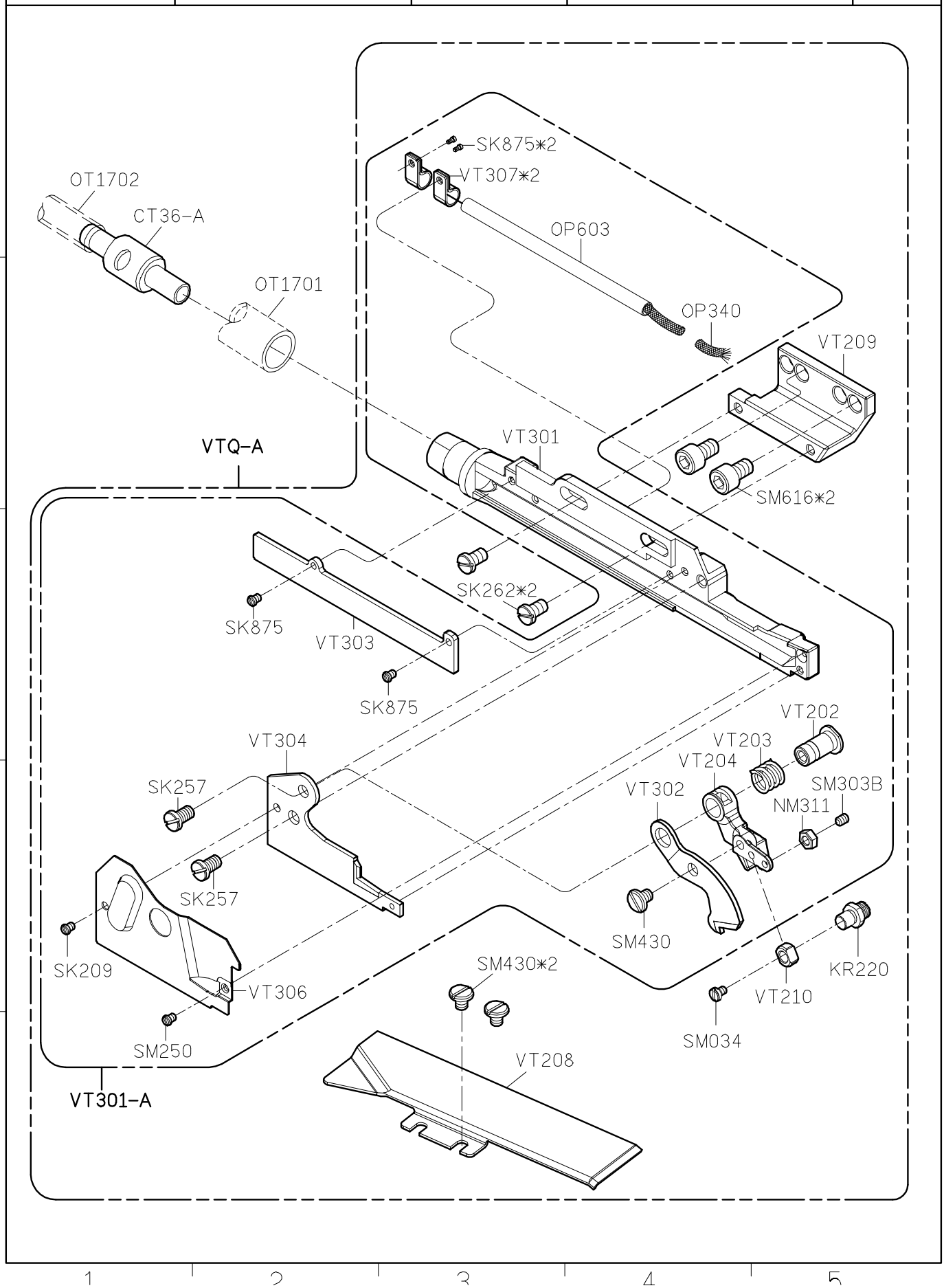

SiRUBA TABLE CUT - OUT	Series	Item Code	Subclass / Remark	Mounting
	700Q/988Q	TB301Q	• For All 700Q series excluding BK , BKS models • Used with 700Q-T1	Fully-submerged
				Date
				2012/08/30

單位/UNIT:mm
所有尺寸公差/TOLERANCE:±2
重量(W):4.25Kg±5%

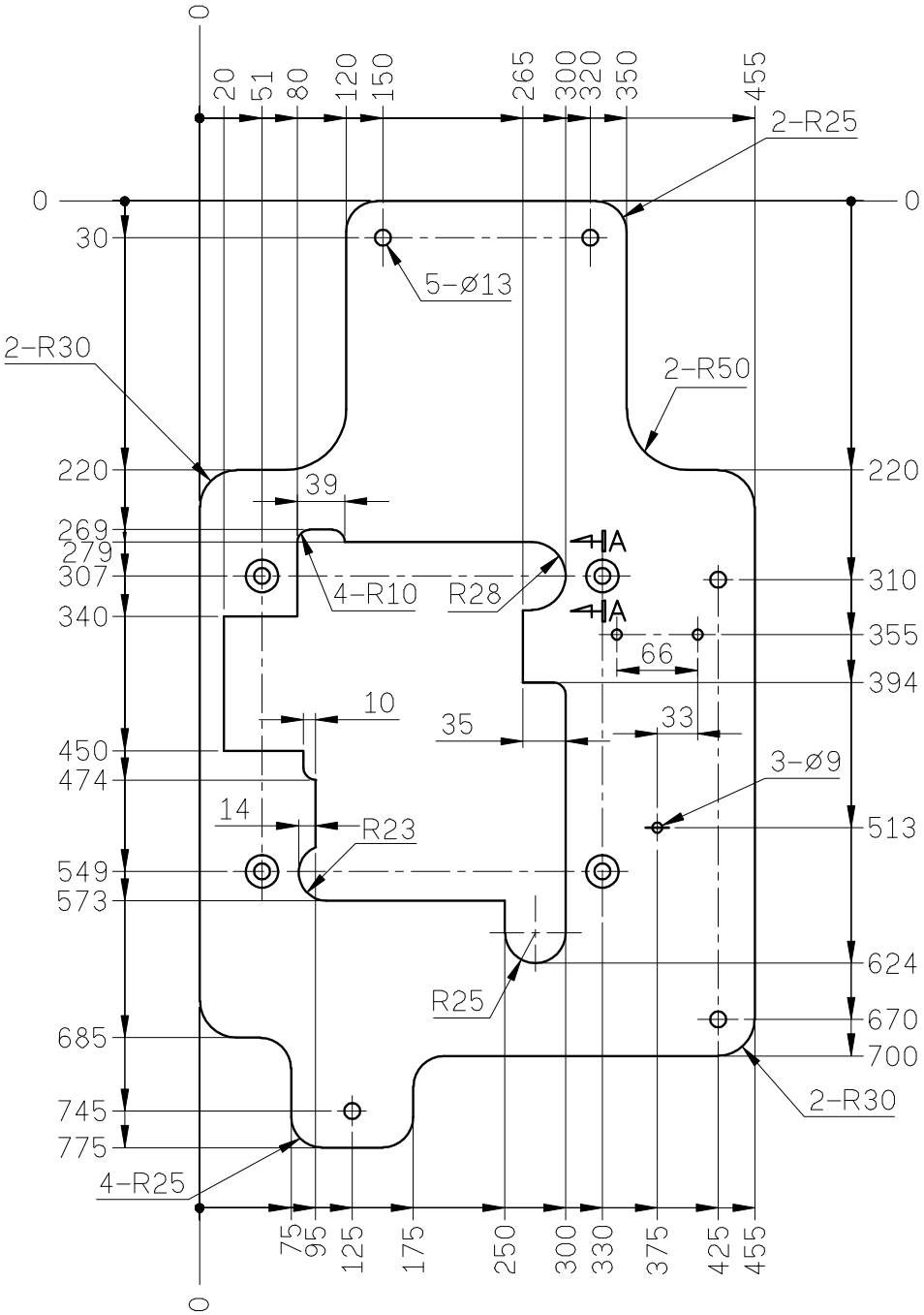

SiRUBA PARTS LIST	Series	Parts Group	Subclass / Remark	Page
	700Q/988Q	TB-Q1		1/1
				Date
				2012/10/26

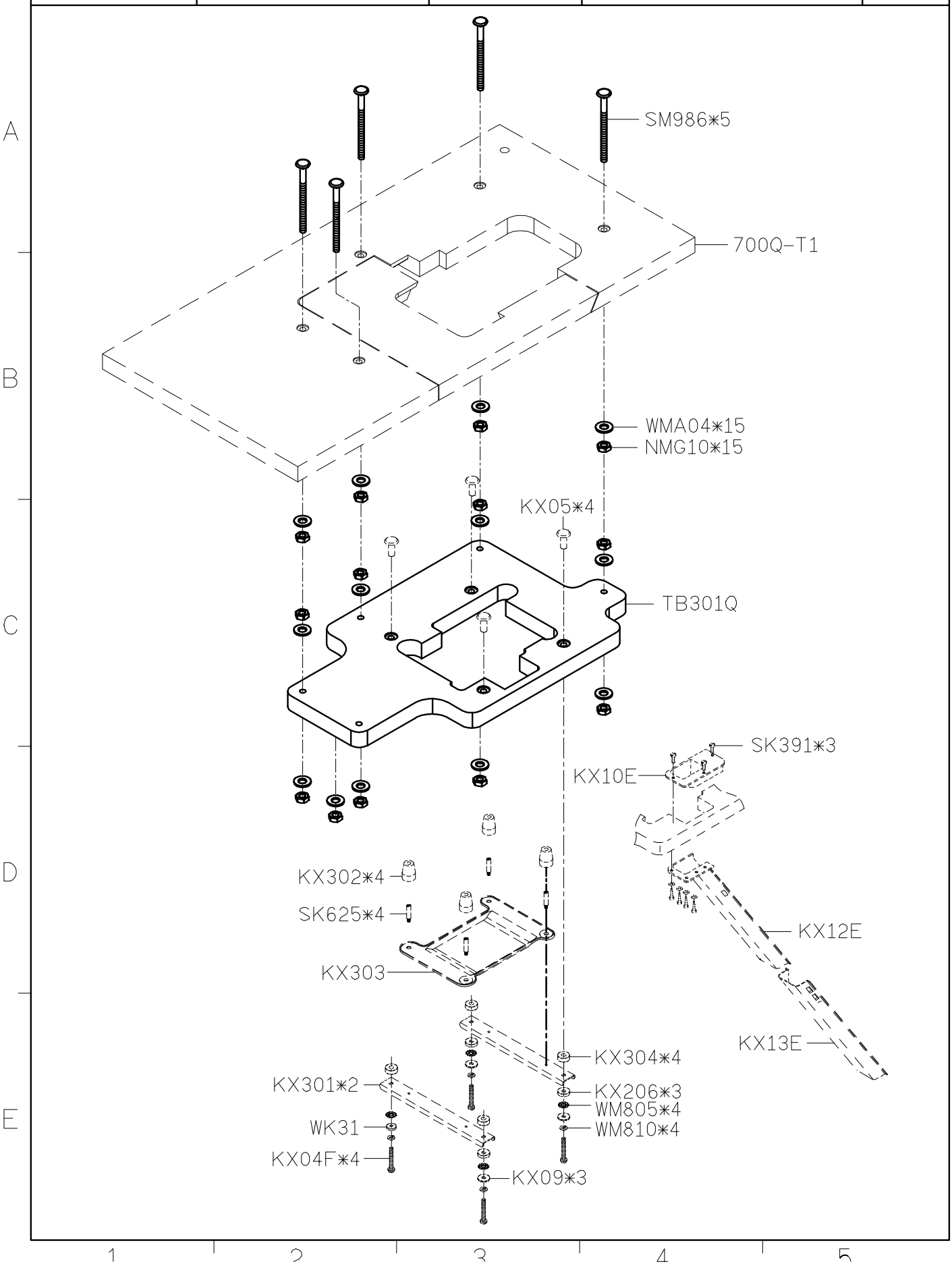

SiRUBA TABLE CUT - OUT	Series	Item Code	Subclass / Remark	Mounting
	700Q/988Q	700Q-T1	• For All 700Q series excluding BK , BKS models • Used with TB301Q	Fully-submerged
				Date
				2012/10/31

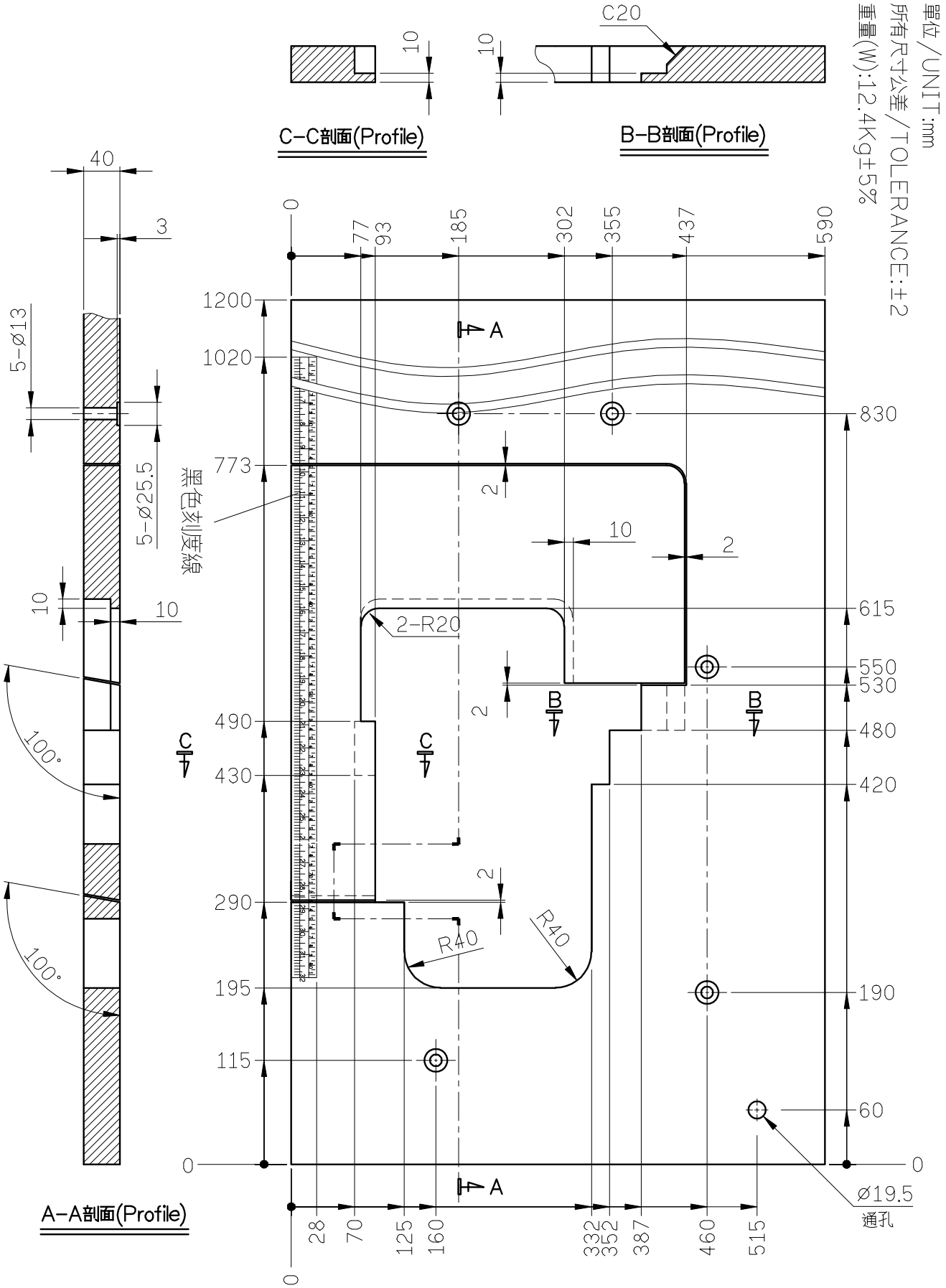
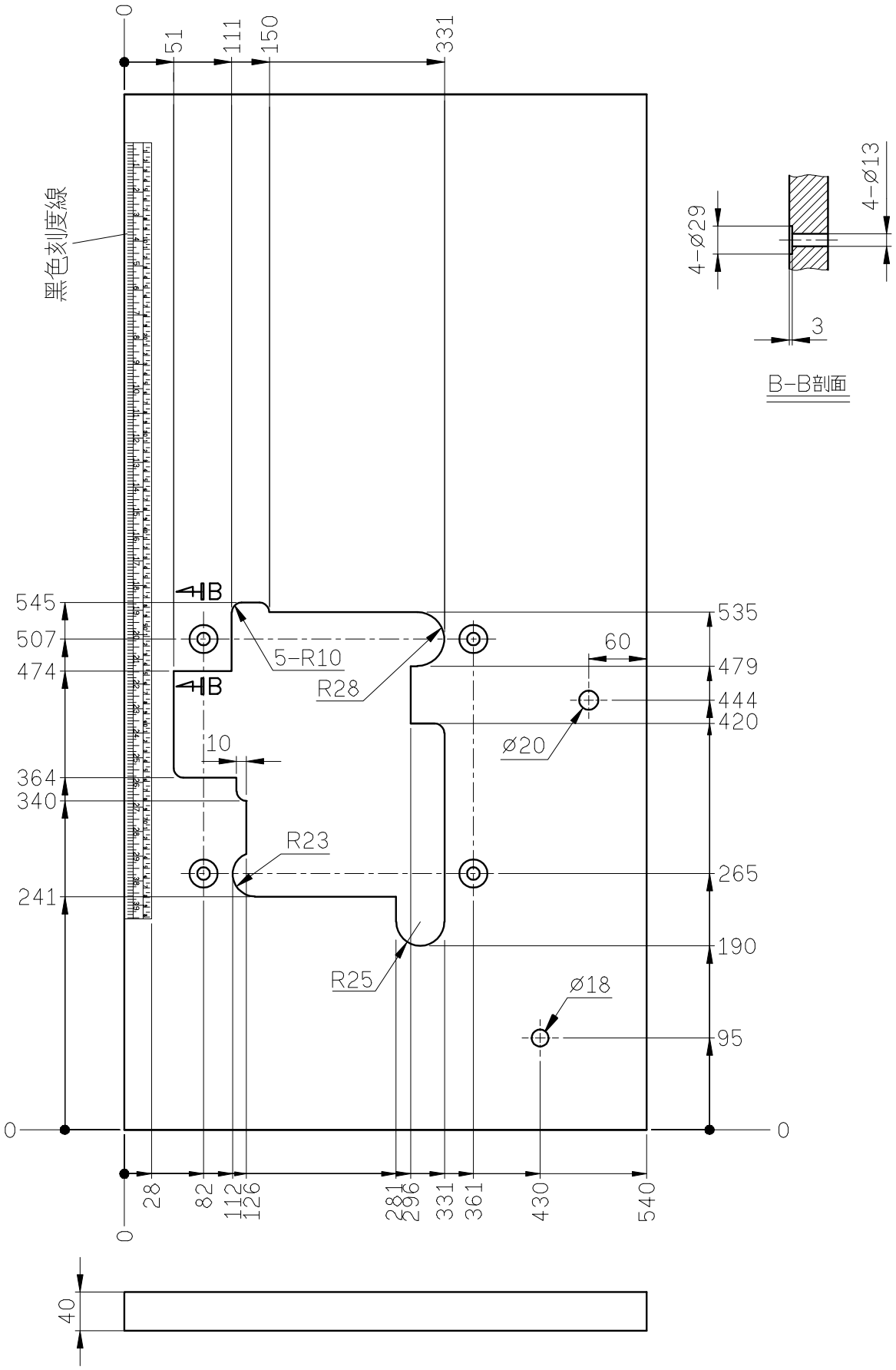
SiRUBA TABLE CUT - OUT	Series	Item Code	Subclass Remark	Mounting
	700Q/988Q	700Q-T	UNIT: mm TOLERANCE: ±2 WEIGHT: 11.3 kg ±5%	Mon-submerged
				Date
				2012/09/17