SiRUBA®

銀箭牌工業用縫紉機

INDUSTRIAL SEWING MACHINE

700FX

零件圖 PARTS LIST

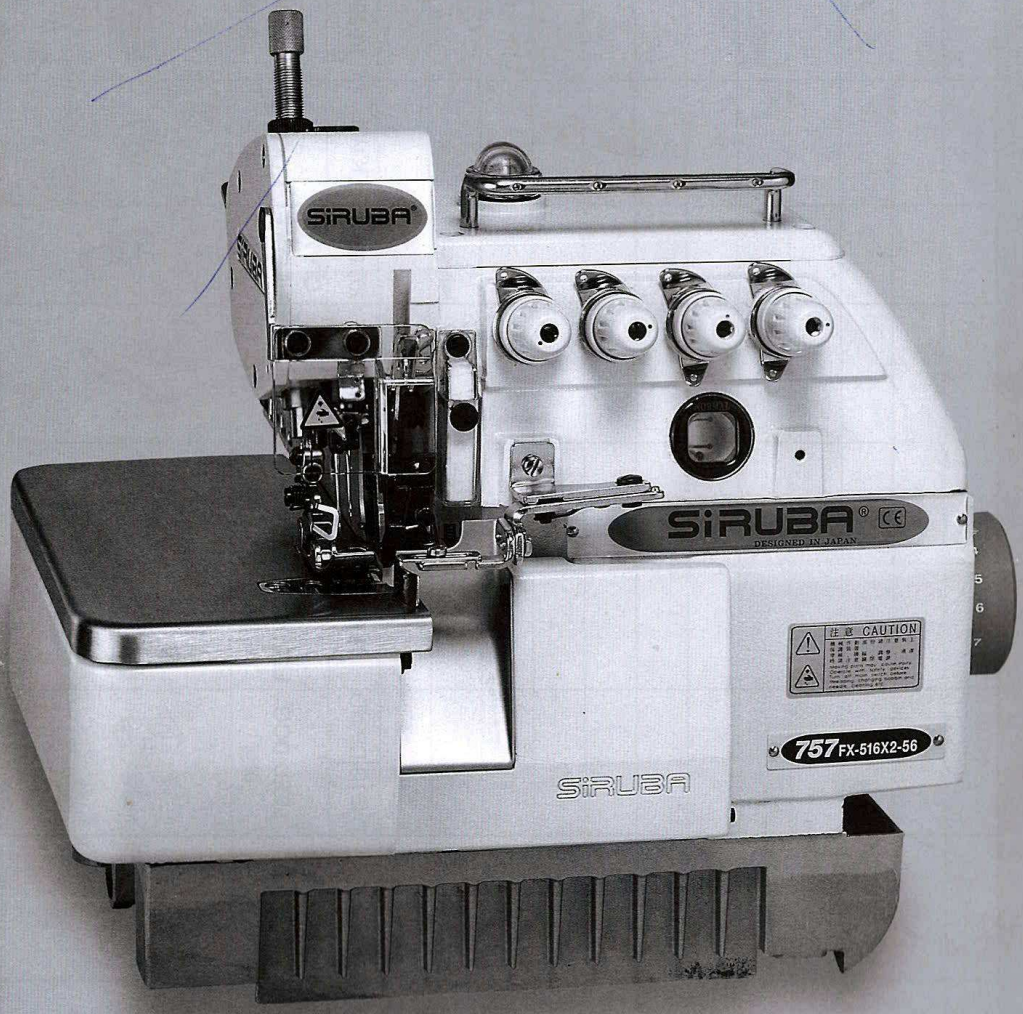

CE

高林股份有限公司
KAULIN MFG. CO., LTD.

機型 MODEL	針板 NEEDLE PLATE	送具 FEED DOG		送具 FEED DOG	押具 PRESSER FOOT	勾針 LOOPER	針鐺 NEEDLE CLAMP	束子 COLLAR	衝程 CRANK	衝程 CRANK	針號 NEEDLE
757FX-516X2-56	E871	D491D	D504D	H505	P962-A	LP38	KG158-A	KJ13F	KF56-A	KJ11B-E	DC27 #18*2

規格件表/CONVERSION CHART

PARTS LIST FOR KA GROUP

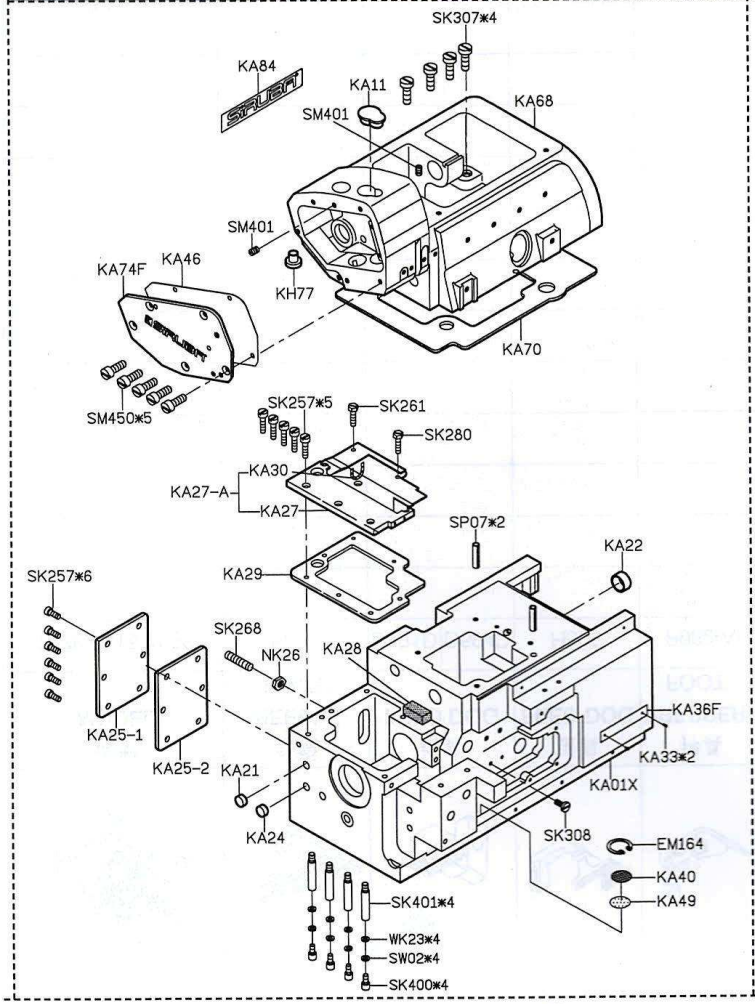

PARTS LIST FOR KB GROUP

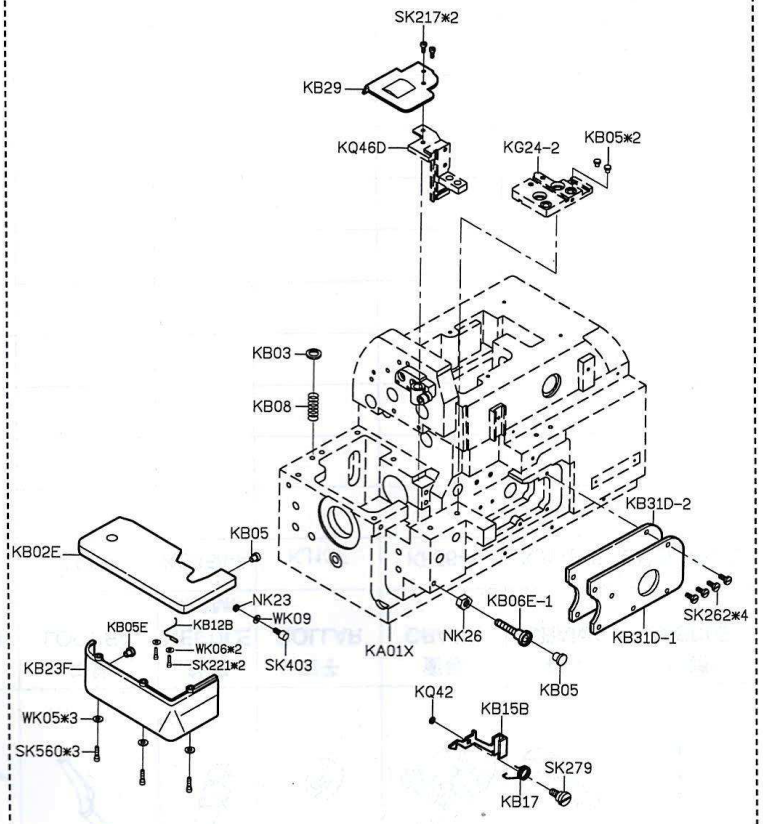

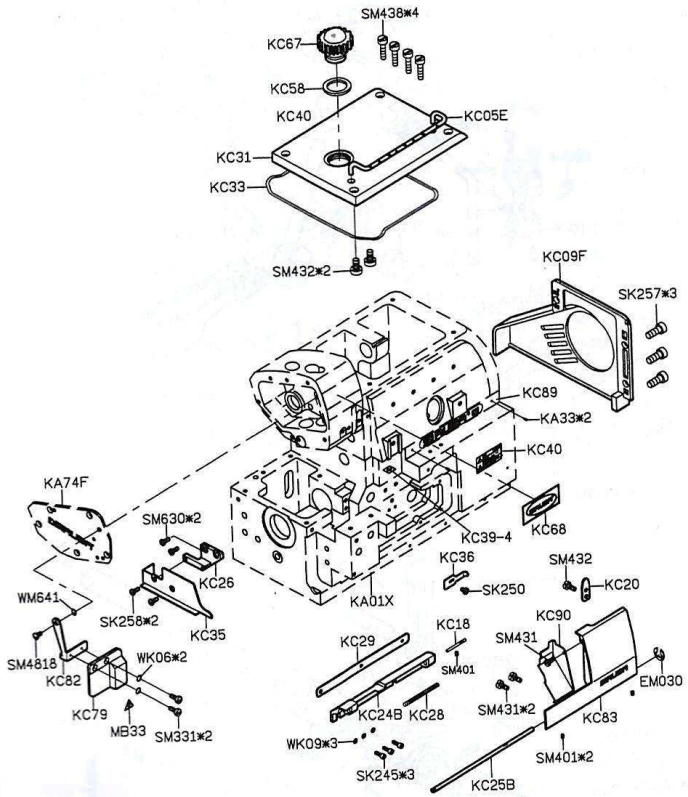

PARTS LIST FOR KC GROUP

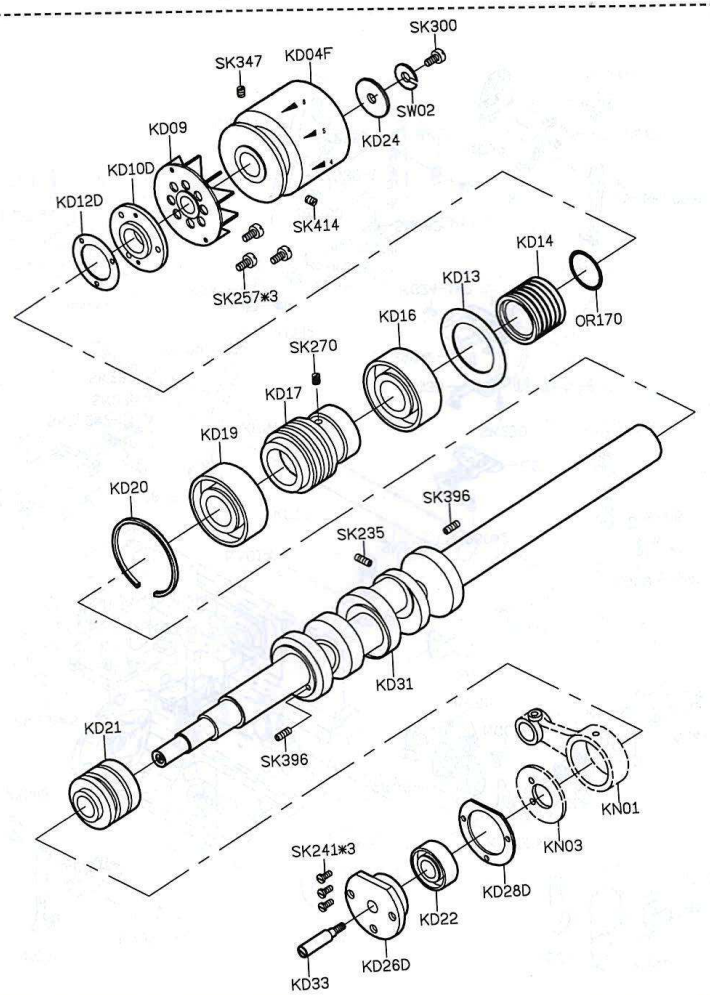

PARTS LIST FOR KD GROUP

PARTS LIST FOR KF GROUP

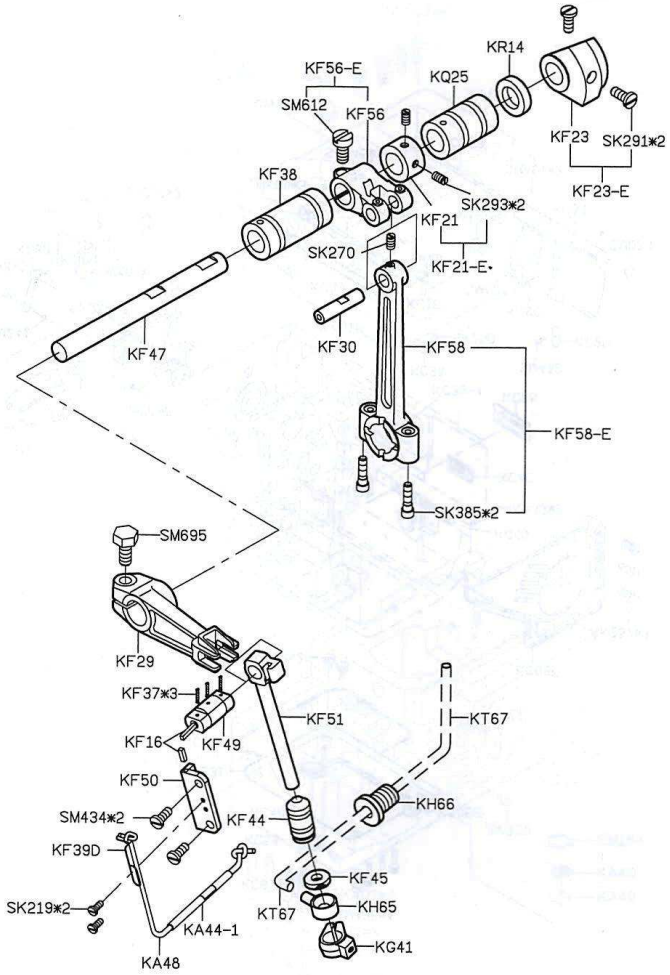

PARTS LIST FOR KG GROUP

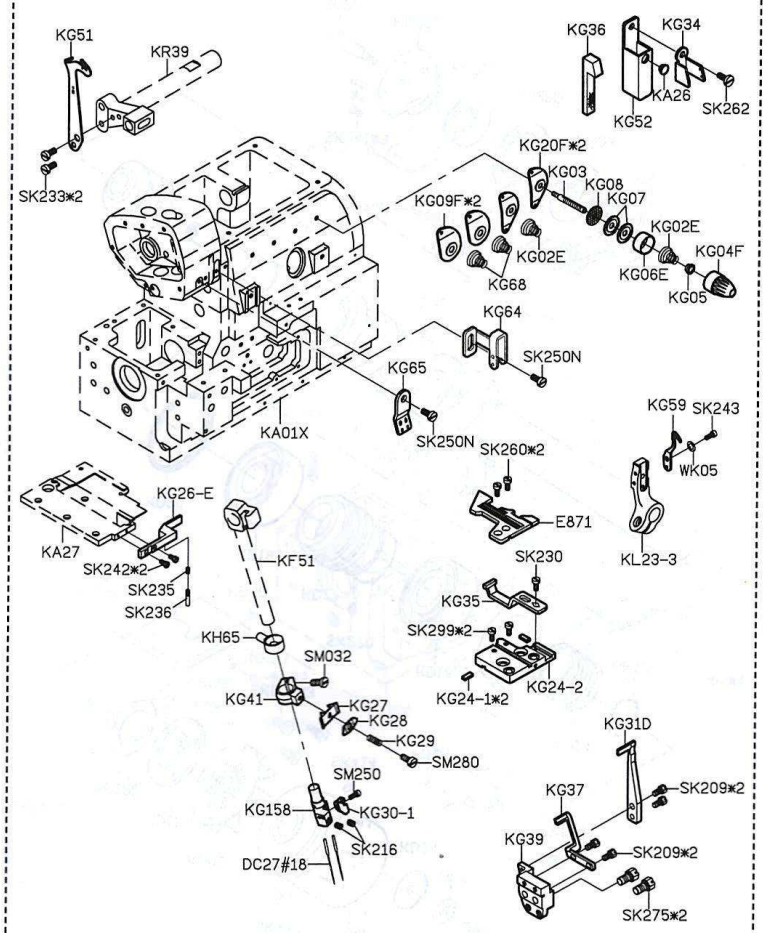

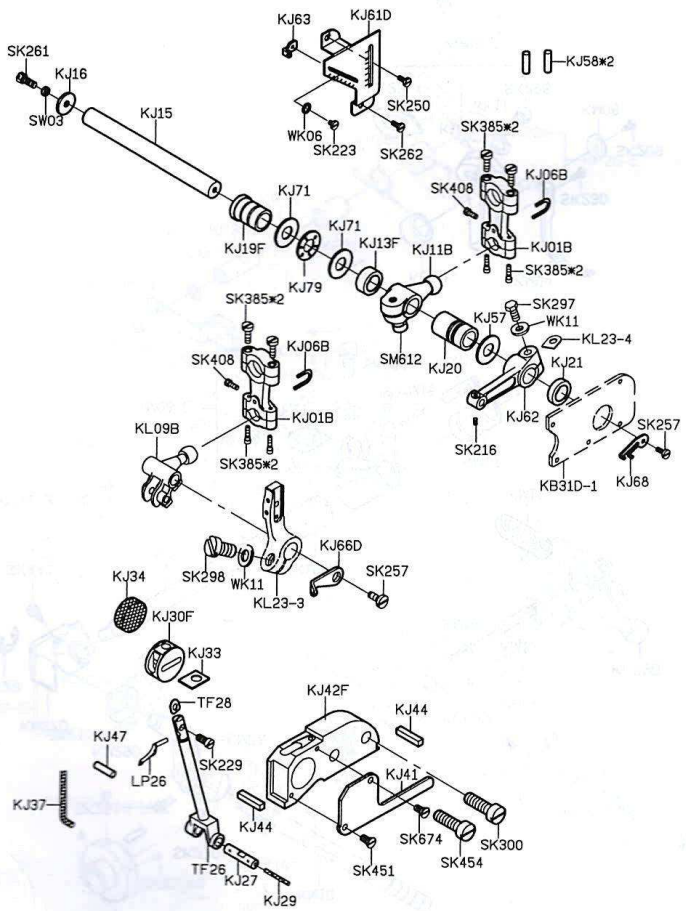

PARTS LIST FOR KJ GROUP

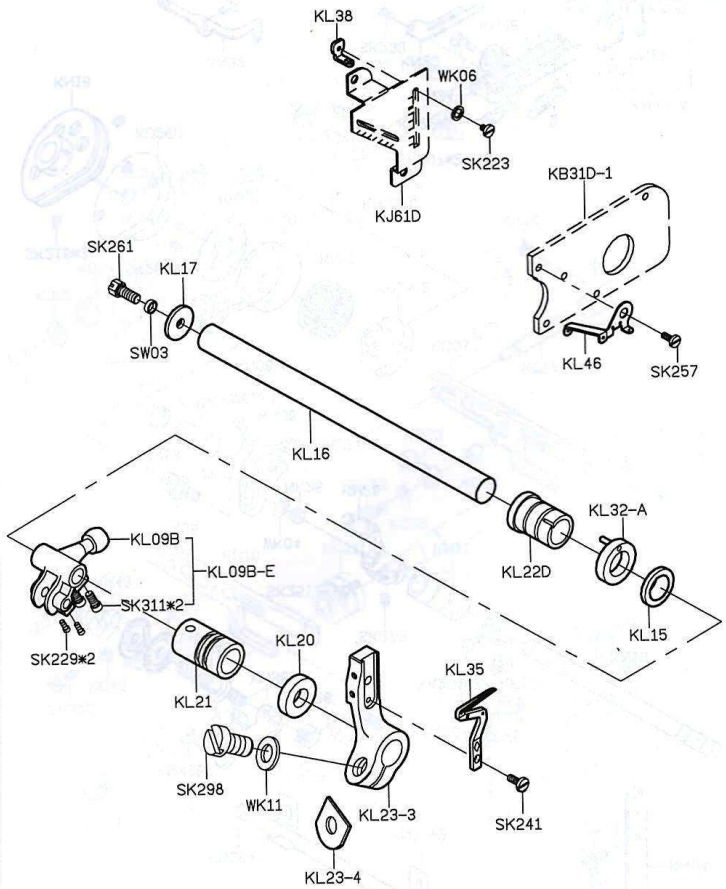

PARTS LIST FOR KL GROUP

PARTS LIST FOR KM GROUP

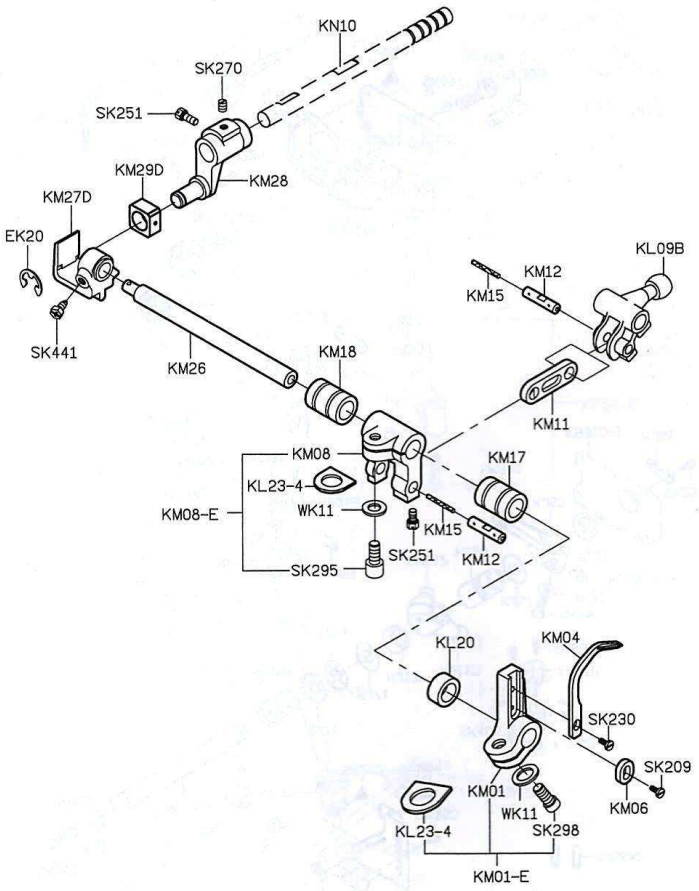

PARTS LIST FOR KN GROUP

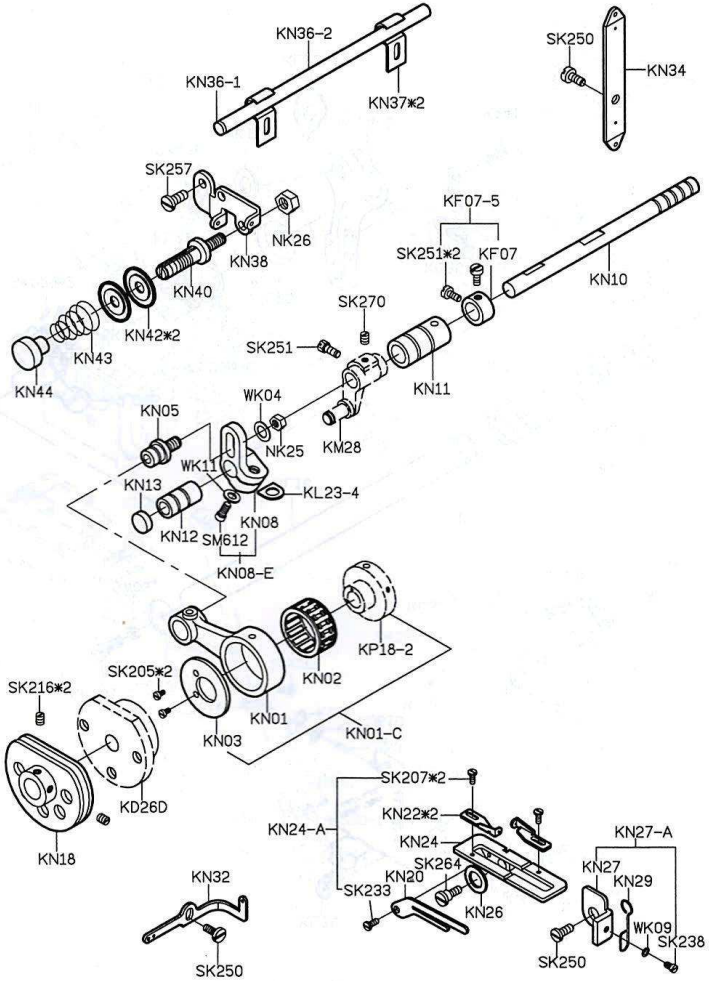

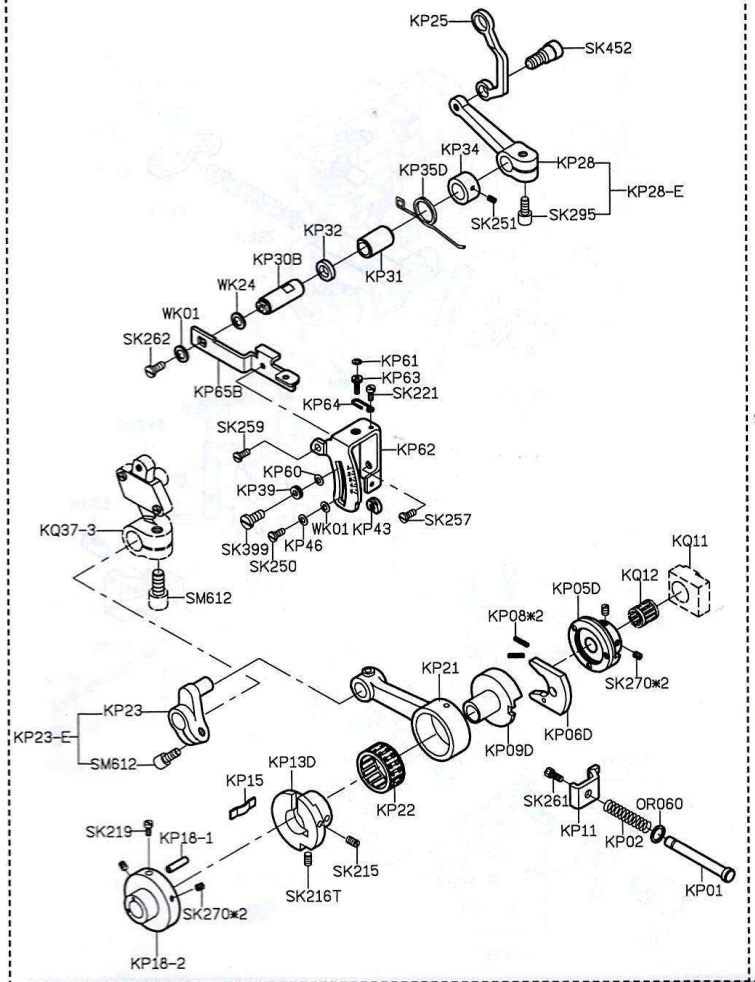

PARTS LIST FOR KP GROUP

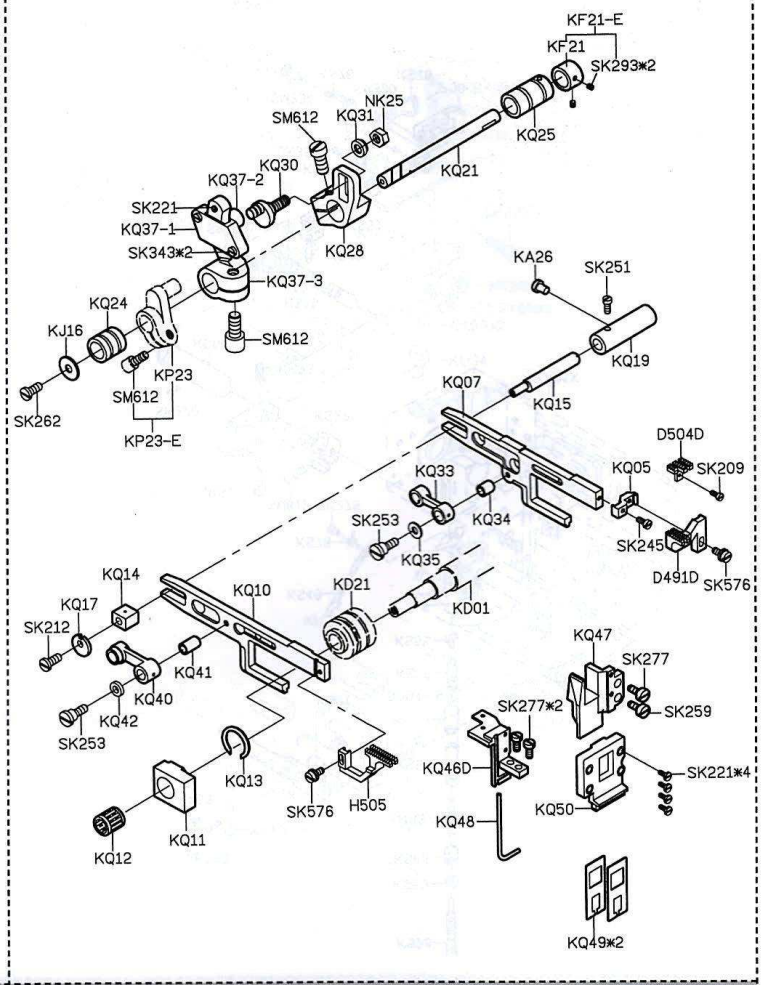

PARTS LIST FOR KQ GROUP

PARTS LIST FOR KR GROUP

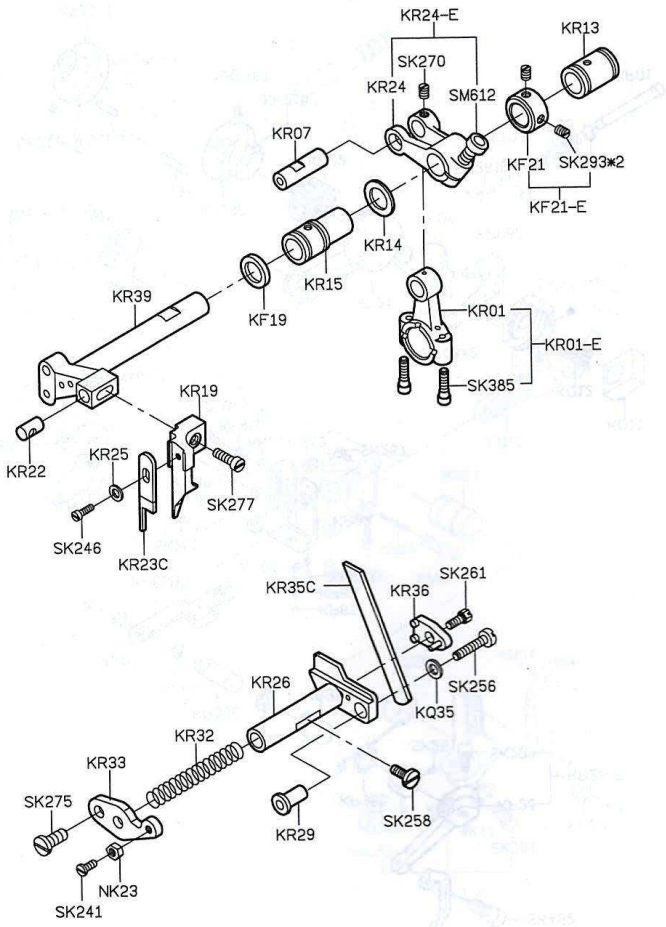

PARTS LIST FOR KS GROUP

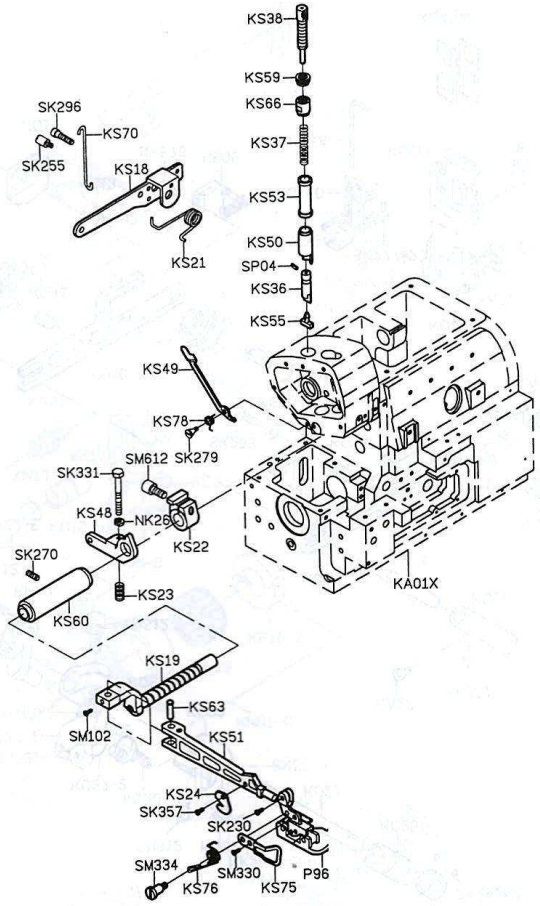

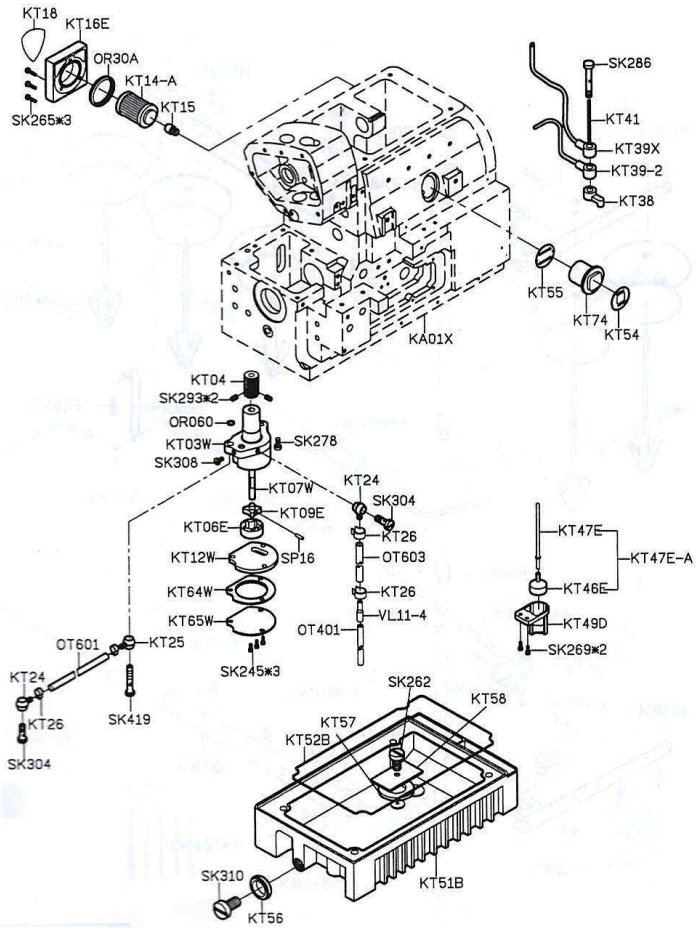

PARTS LIST FOR KT GROUP

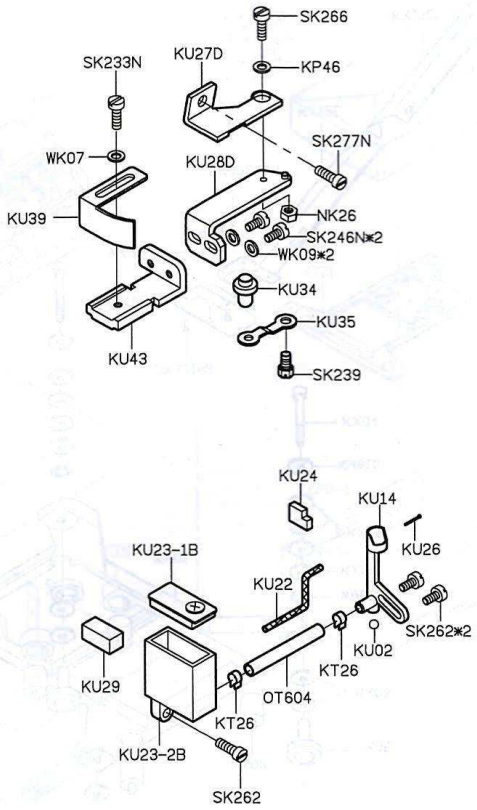

PARTS LIST FOR KU GROUP

PARTS LIST FOR KW GROUP

KW40E-5

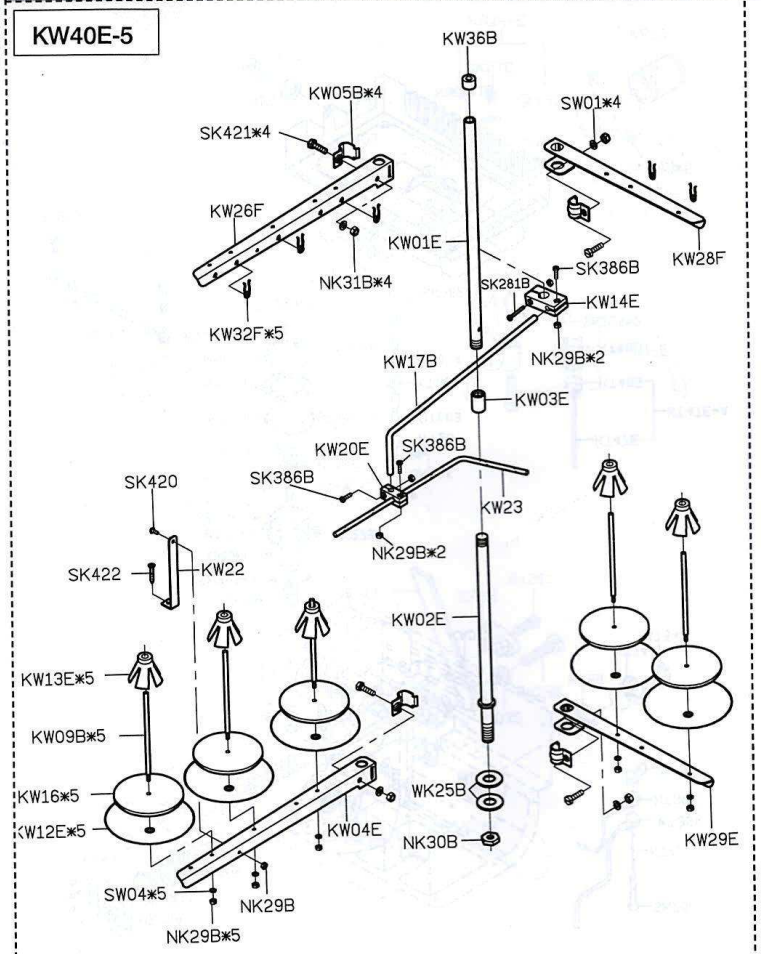

PARTS LIST FOR KX GROUP

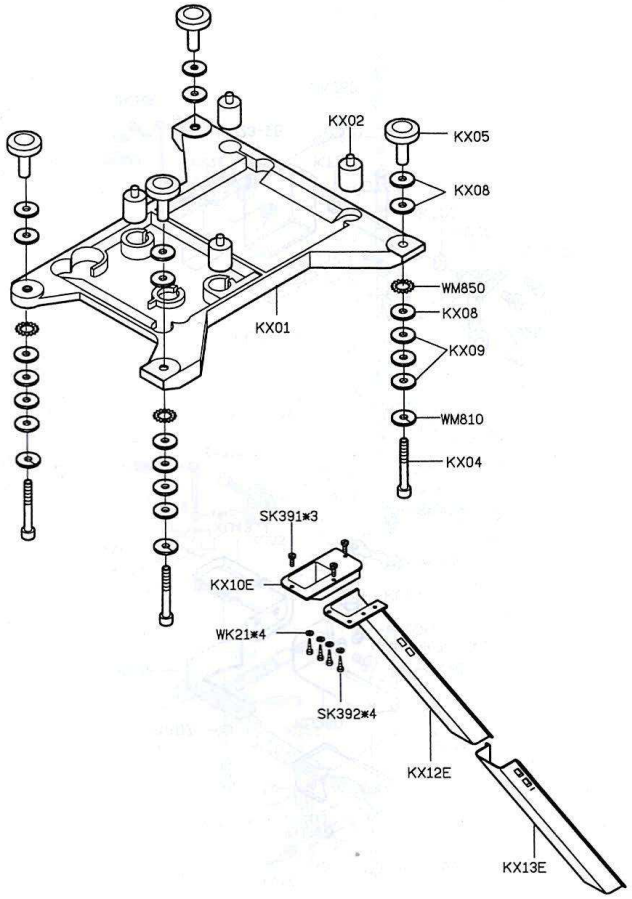

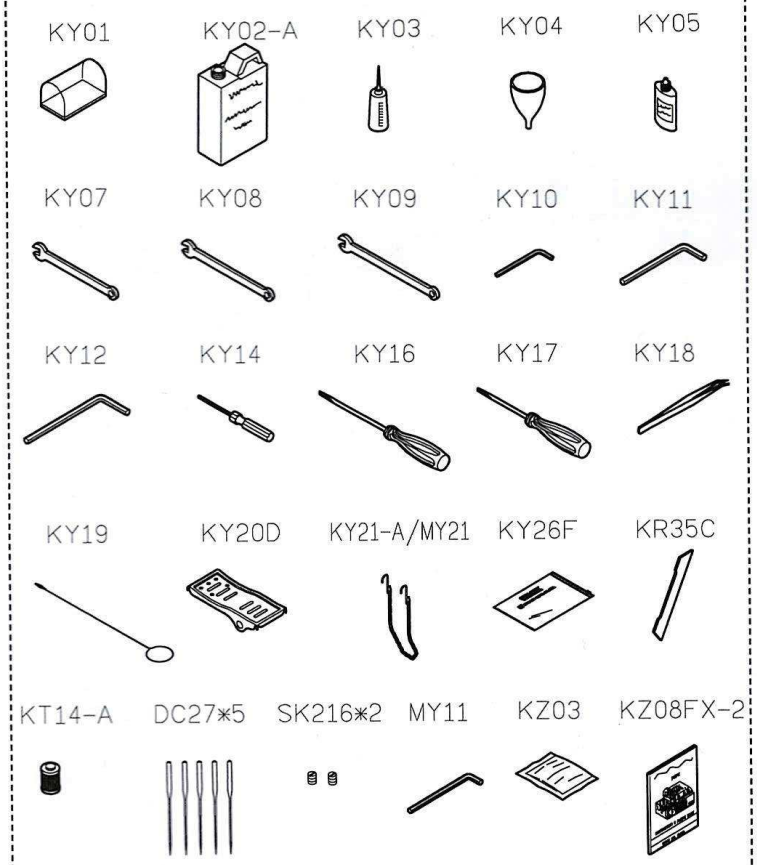

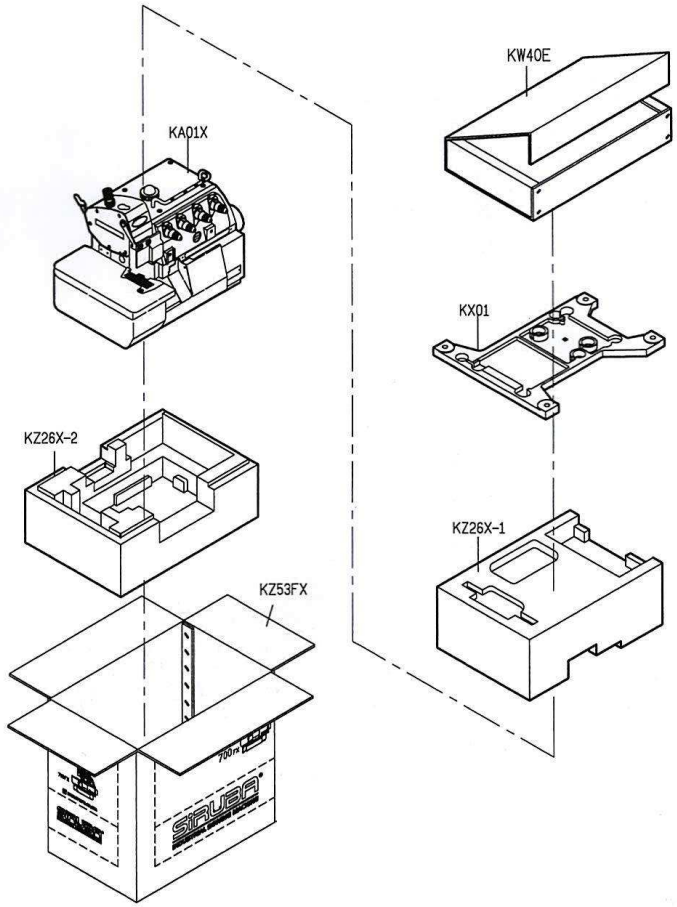

PARTS LIST FOR KY GROUP

PARTS LIST FOR KZ GROUP